TEMA 1

POLITECNICO DI TORINO

ESAME DI STATO - II SESSIONE ANNO 2006

SETTORE CIVILE - AMBIENTALE
SEZIONE A

PROVA PRATICA

38/S

Sbancamento in terra e roccia per la creazione di un piazzale da adibire a stazione di servizio lungo una strada a mezza costa

La situazione iniziale ed il lavoro ultimato sono schematicamente descritti negli schizzi quotati 1 e 2, in allegato.

Il materiale designato come *terra* è un detrito di falda misto ad argilla sabbiosa; può essere agevolmente escavato con pale meccaniche, escavatori, dozer ecc.
Durante lo scavo si sostiene senza problemi su scarpate a 50°.

Il materiale designato come *roccia* è uno scisto di media resistenza, sano, disposto leggermente a reggipoggio rispetto allo scavo. Può essere agevolmente abbattuto con esplosivi di media potenza (slurries, emulsioni, ecc.) con consumi specifici di 300-350 g/rn^3; è moderatamente abrasivo. Durante lo scavo si sostiene senza problemi anche su pareti verticali; è tuttavia prevista, man mano che lo scavo procede, l'applicazione alla parete finale di chiodature e di una rete metallica e, a lavoro ultimato, di uno strato di calcestruzzo proiettato.

La risulta dello scavo non può essere scaricata sulla scarpata della strada, in quanto sbarrerebbe il corso d'acqua; è dunque strasportata ad un sito distante circa 500 m.
La strada deve rimanere agibile (a senso unico laternato nel lato prospiciente i lavori). Il traffico viene però del tutto interrotto, per 2 ore circa, in occasione de caricamento e sparto delle mine e del conseguente sgombero della sede stradale dai detriti.

Il lavoro è suddiviso, di massima, in tre fasi:

1. Escavazione della terra

2. Costruzione del muro di ritenuta; questa fase, la cui durata prevista è pari a 3 mesi, di cui il primo è temporaneamente sovrapposto alla fase 1, non è oggetto del tema; la presenza del manufatto non è tuttavia trascurabile nella fase successiva

3. Escavazione della roccia

Il trasporto al sito di scarico della risulta è affidato ad altra impresa e non è oggetto del tema.

Quesiti

Q*1. Scegliere, motivando sinteticamente la scelta, i mezzi che si ritiene opportuno impiegare nella fase 1; descrivere, con schizzi, la situazione del cantiere in tempi successivi nel corso di tale fase ed indicare approssimativamente il tempo necessario al sue completamente

Q2. Scegliere, motivando sinteticamente la scelta, i mezzi che si ritiene opportuno impiegare nella fase 3; descrivere con schizzi la situazione del cantiere in tempi successivi nel corso di tale fase

Q3. Tracciare lo schema di una volata tipo, tenendo conto:
a. della decisione presa al punto precedente circa i mezzi di perforazione e smarino
b. dell'opportunità di ridurre al minimo il numero di volate, per limitare il disagio agli utenti della strada
c. di salvaguardare l'integrità del muro di ritenuta e la buona qualità della parete residua

Q4. Indicare approssimativamente il tempo necessario al completamento del lavoro, sulla base delle scelte fatte.

Si suggerisce di procedere come segue:

1. Valutazione volumetrie
2. Elenco operazioni elementari che ciascuna fase comporta, con breve descrizione
3. Scelta dei mezzi congruenti alle operazioni predette ad alla particolare situazione
4. Disegno della volata
5. Sintesi, preferibilmente mediante tabelle, delle risposte ai quesiti

Allegati

Schizzi 1,2
Stralci da manuali Caterpillar e Atlas Copco

1. Situazione iniziale

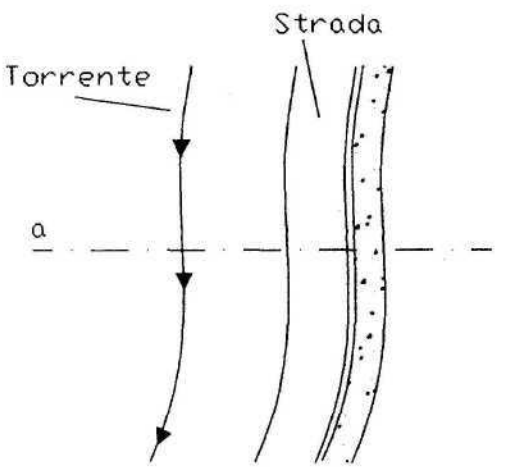

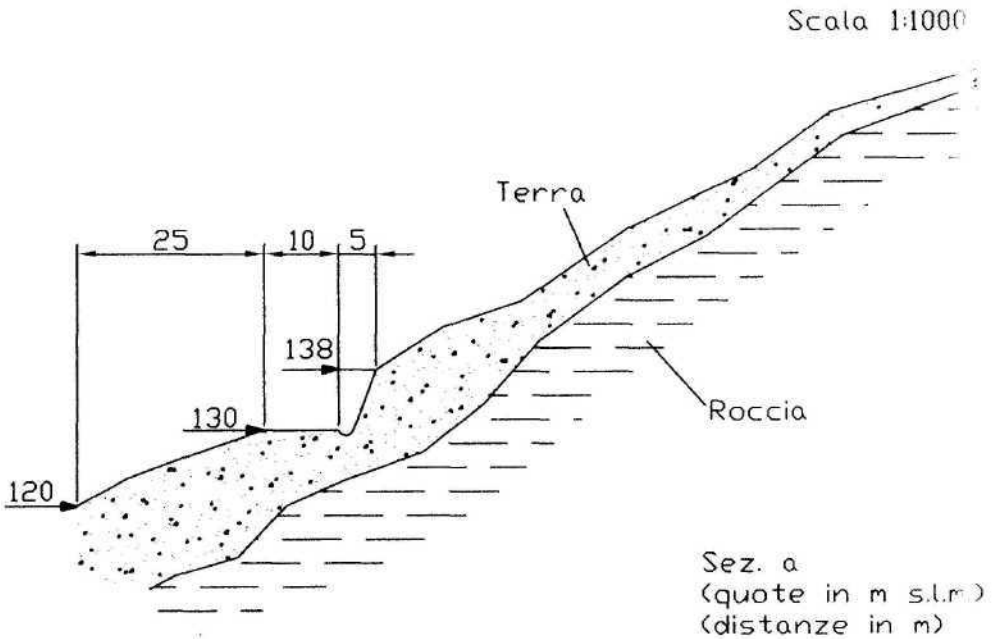

2. Lavoro ultimato

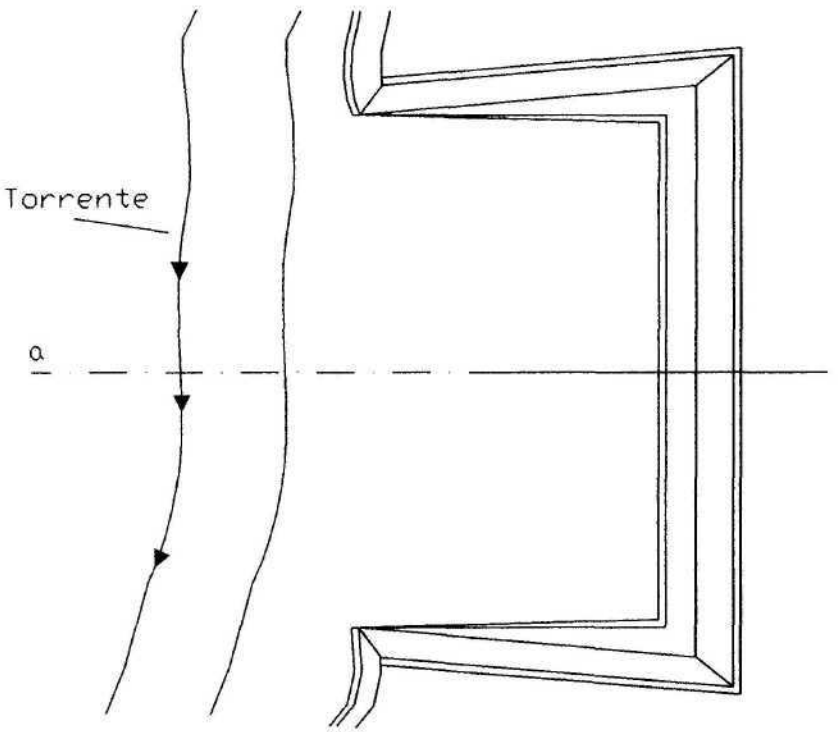

Scala 1:1000

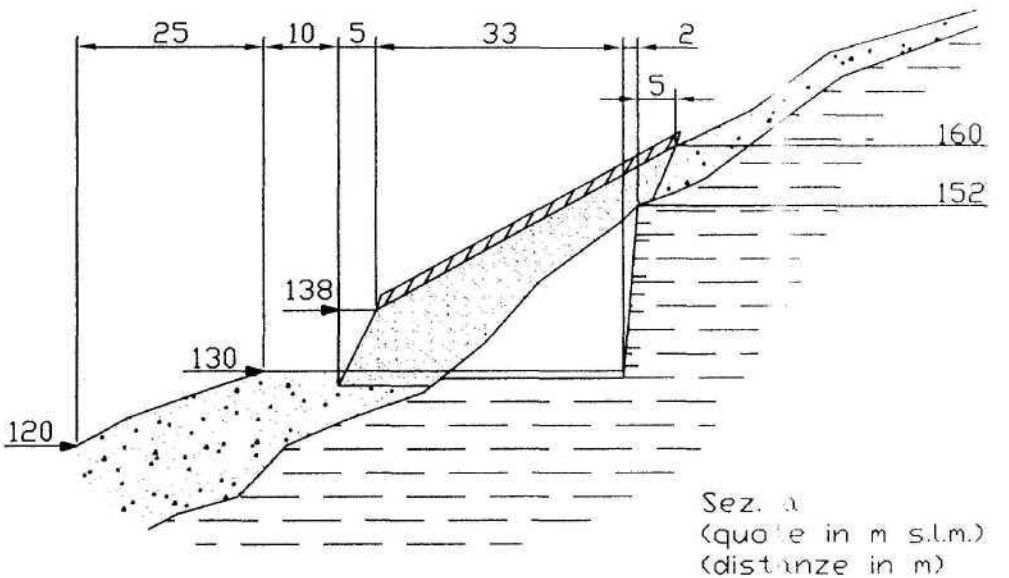

MODEL	936E		950F		966C		966F	
Flywheel Power	101 kW	135 HP	127 kW	170 HP	127 kW	170 HP	164 kW	220 HP
Engine Model	3304		3116		3306		3306	
Rated Engine RPM	2200		2200		2200		2200	
Bore	121 mm	4.75"	105 mm	4.13"	121 mm	4.75"	121 mm	4.75"
Stroke	152 mm	6"	127 mm	5"	152 mm	6"	152 mm	6"
No. Cylinders	4		6		6		6	
Displacement	7.0 L	425 in^3	6.6 L	403 in^3	10.5 L	638 in^3	10.5 L	638 in^3
Speeds Forward	km/h	mph	km/h	mph	km/h	mph	km/h	mph
1st	7.9	4.9	7.4	4.6	7.0	4.3	7.1	4.4
2nd	15.0	9.3	13.4	8.3	12.4	7.7	12.5	7.8
3rd	25.3	15.7	23.3	14.4	21.4	13.3	21.8	13.6
4th	41.8	30.0	39.3	24.4	34.9	21.7	37.6	23.4
Speeds Reverse								
1st	9.0	5.6	8.1	5.0	7.9	4.9	8.1	5.0
2nd	15.9	9.9	14.6	9.0	13.9	8.6	14.3	8.9
3rd	27.9	17.3	25.5	15.8	23.9	14.9	24.8	15.4
4th	46.0	28.6	43.0	26.7	38.9	24.2	42.6	26.4
Hydraulic Cycle Time, Rated Load in Bucket:	Seconds		Seconds		Seconds		Seconds	
Raise	6.5		6.6		6.2		7.1	
Dump	1.8		2.2		1.6		2.0	
Lower (Empty, Float Down)	3.2		3.0		3.8		2.4	
Total	11.5		11.8		11.6		11.5	
Tread Width	1.98 m	6'6"	2.09 m	6'10"	2.16 m	7'1"	2.20 m	7'3"
Width Over Tires	2.57 m	8'5"	2.76 m	9'0"	2.77 m	9'1"	2.94 m	9'8"
Ground Clearance	379 mm	14.9"	474 mm	18.7"	400 mm	15.7"	476 mm	18.7"
Fuel Tank Refill Capacity	200 L	52.8 U.S. gal	222 L	58.7 U.S. gal	246 L	65 U.S. gal	304 L	79 U.S. gal
Hydraulic System Refill Capacity	146 L	38.5 U.S. gal	153 L	40.4 U.S. gal	197 L	52 U.S. gal	205 L	53 U.S. gal

MODEL	910E		916		926E		930T	
Flywheel Power	56 kW	78 HP	63 kW	85 HP	82 kW	110 HP	78 kW	105 HP
Engine Mode!	3114		3204		3204		3304T	
Rated Engine RPM	2400		2400		2400		2200	
Bore	105 mm	4.13"	114 mm	4.5"	114 mm	4.5"	121 mm	4.75"
Stroke	127 mm	5"	127 mm	5"	127 mm	5"	152 mm	6"
No. Cylinders	4		4		4		4	
Displacement	4.4 L	268 in^3	5.2 L	318 in^3	5.2 L	318 in^3	7.0 L	425 in^3
Speeds Forvvard	km/h	mph	km/h	mph	km/h	mph	km/h	mph
1sl	6.6	4.1	6.7	4.2	6.6	4.1	5.4	3.4
2nd	12.4	7.7	13.0	8.1	12.1	7.5	10.2	6.3
3rd	22.4	13.9	24.8	15.4	21.3	13.3	18.3	11.4
4th	34.0	21.1	—		34.2	21.2	30.5	19.0
Speeds Reverse								
1st	6.6	4.1	6.8	4.2	7.1	4.4	5.8	3.6
2nd	12.4	7.7	13.2	8.3	13.1	8.1	11.0	6.8
3rd	22.4	13.9	25.0	15.5	23.0	14.3	19.7	12.2
4th	—		—		36.8	22.9	32.9	20.4
Hydraulic Cycle Time, Rated Load in Bucket:	Seconds		Seconds		Seconds		Seconds	
Raise	5.3		6.3		6.0		6.6	
Dump	1.3		1.3		1.7		1.4	
Lower (Empty, Float Down)	3.2		3.1		3.6		3.6	
Total	9.8		10.7		11.3		11.6	
Tread Width	1.73 m	5'8"	1.85 m	6'1"	1.85 m	6'0"	1.93 m	6'3"
Width Over Tires	2.15 m	70.7"	2.32 m	77.7"	2.33 m	7'8"	2.39 m	7'8"
Ground Clearance	343.4 mm	13.5"	322 mm	12.7"	322 mm	12.7"	348 mm	13.7"
Fuel Tank Retili Capacity	97 L	25.6 U.S. gai	123 L	32.5 U.S. gai	150 L	39.6 U.S. gai	148 L	39.1 U.S. gai
Hydraulic System Retili Capacity	70 L	18.5 U.S. gai	71 L	18.8 U.S. gai	92 L	24 U.S. gai	74 L	19.6 U.S. gai

Bucket Type and Ground Engaging Tools	General Purpose					Penetr. Weld-on Flush Teeth
	Bolt-on Cutting Edge	Bolt-on Teeth	Bolt-on Cutting Edge	Bolt-on Teeth & Seg.	Bolt-on Teeth	
Capacity, heaped ..... m^3	1.5	1.4	1.4	1.4	1.2	1.4
yd^3	2.00	1.75	1.75	1.75	1.50	**1.75**
Capacity, struck (§) ..... m^3	1.31	1.23	1.17	1.17	1.09	1.14
yd^3	1.71	**1.61**	1.53	1.53	1.43	**1.49**
Width (§) ..... mm	2395	2378	2395	2378	2378	2436.5
ft/in	7'10.5"	7'9.5"	**7'10.5"**	**7'9.5"**	**7'9.5"**	**80"**
Dump clearance @ full lift and -45° discharge (§) ..... mm	2648	2714	2680	2680	2746	2676
ft/in	**8'8.5"**	**8'11"**	**8'9.5"**	**8'9.5"**	90"	8'9.5"
Reach at 45° full lift and 45° discharge (§) ..... mm	926	888	889	889	850	825
ft/in	**30.5"**	**2'11"**	**2'11"**	**2'11"**	**2'9.5"**	**2'8.5"**
Reach at 45° discharge angle, 2130 mm (7'0") clearance (§) ..... mm	1296	1291	1275	1275	1269	1209
ft/in	4'3"	4'3"	42"	4'2"	4'2"	**3'11.5"**
Reach with arms horizontal and bucket level ..... mm	2003	1931	1953	1953	1881	1931
ft/in	**6'7"**	6'4"	6'5"	6'5"	6'2"	**6'4"**
Digging depth (§) ..... mm	78	53	78	78	53	53
in	**3.1"**	2.1"	3.1"	3.1"	2.1"	**2.1"**
Overall length (§) ..... mm	6369	6276	6319	6319	6226	6276
ft/in	**20'10.5"**	**207"**	**20'9"**	**20'9"**	**20'5"**	**207"**
Overall height (bucket @ full raise) (§) ..... mm	4602	4602	4524	4524	4524	4495
ft/in	**15'1"**	**15'1"**	**14'10"**	**14'10"**	**14'10"**	**14'9"**
Loader clearance circle (bucket in carry position) (§) ..... m	10.92	11.12	10.92	11.02	11.02	11.08
ft/in	**35'10"**	**36'6"**	**35'10"**	**36'2"**	**36'2"**	**36'4"**
Static tipping load** Straight (§) ..... kg	6626	6706	6684	6610	6763	6712
lb	**14,608**	**14,784**	**14,735**	**14,572**	**14,910**	**14,797**
Full 40° turn (§) ..... kg	5790	5861	5845	5772	5916	5871
lb	**12,765**	**12,921**	**12,886**	**12,725**	**13,042**	**12,943**
Breakout force* (§) ..... kg	8545	9347	9124	9059	10026	9338
lb	**18,838**	**20,606**	**20,115**	**19,971**	**22,103**	**20,586**
Operating weight** ..... kg	8590	8580	8554	8611	8545	8595
lb	**18,937**	**18,915**	**18,858**	**18,984**	**18,838**	**18,948**

*Measured 102 mm (4.0") behind tip of cutting edge with bucket hinge pin as pivot point in accordance with SAE J732c.
**Static tipping load and operating weight are based on standard machine configuration with 17.5 x 25, 12 PR (L-2) tires, full fuel tank, coolant, lubricants and operator.
Note: Specifications and ratings conform to all applicable standards recommended by the Society of Automotive Engineers. SAE Standards J732c and J742b govern loader ratings, denoted in the text by (§).

	Change in Operating Weight		Change in Articulated Static Tipping Load	
	kg	lb	kg	lb
Remove ROPS cab or canopy	-418	**- 922**	-376	**- 828**
Remove ROPS canopy only	-207	**- 457**	-187	**- 412**
15.5-25, 8 PR (L-2) tires & rims	-220	**- 485**	-138	**- 304**
15.5-25, 12 PR (L-2) tires & rims	-189	**- 417**	-119	**- 262**
15.5-25, Radial (L-2 equivalent) tires & rims	**- 93**	**- 205**	- 58	**- 128**
15.5-25, 12 PR (L-3) tires & rims	-122	**- 269**	- 77	**- 170**
17.5-25, Radial (L-2 equivalent) tires & rims	+132	**+ 291**	+ 82	**+ 181**
Tire Ballast				
15.5-25	+384	**+ 846**	+479	**+1054**
17.5-25	+524	**+1155**	+653	**+1437**

Buck«t Type	General Purpose	Rock
Capaci ty heaped (6) . . . . . rrr³ yd³	3.1 4.00	2.7 3.50
Capaci ly. struck (§) . . . . . m³ yri³	2.62 3.4?	—
Cutting edge, type	Straight	**Modified V**
Width (§i . . . . . mm **ft/in**	2920 9'6"	2870 9'4"
Dump clearance @ tuli lift and 45° discharge (§) . . . . . mm **ft/in**	2959 9 7"	2820 9'3"
Reach <§ full lift and 45° discharge (§) . . . . . mm in	890 35"	1010 40"
Reach <ó 45° discharge angle, 2130 mm (7'0") clearance (§) . . mm **ft/in**	1425 4'8"	1490 4'9"
Digging depth (§) . . . . . mm **in**	189 7.4"	189 7.4"
Overall length (§) . . . . . mm **ft/in**	6910 **22' 7"**	7090 **23'3"**
Overall height (Bucket @ full raise) (§) . . . . . mm **ft/in**	5430 **17'9"**	5400 **177"**
Loader clearance circle (bucket in carry position) (§) . . . . . mm **ft/in**	13 600 **447"**	13 600 **44'6"**
Static tipping load* * Straight (§) . . . . . kg lb	12 670 **27,940**	12 540 **27,650**
Full 35° turn (§) . . . . . kg lb	11 640 **25,670**	11 510 **25,380**
Breakout force* (§) . . . . . kg lb	11 750 **25,910**	10 120 **22,315**
Operating weight** (§) . . . . . kg lb	16 730 **36,890**	16 840 **37,130**

"Measured 102 mm (4.0") behind tip of cutting edge with bucket hinge pin as pivot point, in accordance with SAE J732c (1969).
" "Machine with 23.5-25 (L-3), without ballast, full fuel tank, lubricants, operator and side mounted counterweight.
Note: Specifications and ratings conform to ali applicable standards recommended by thè Society of Automotive Engineers. SAE Standards J732c and J742b govern loader ratings, denoted in thè text by (§).

	Change in Operating Weight		Change in Articulated Static Tipping Load	
	kg	**lb**	**kg**	**lb**
23.5-25, 12 PR (L-3) tires with 75% CaCl	+ 1170	**+ 2580**	+ 1850	**+ 4079**
23.5-25, 16 PR (L-3) tires . . . . . *	+ 74	**+ 163**	+ 58	**+ 128**
23.5-25, 16 PR (L-3) tires with 75% CaCl	+1244	**+2743**	+ 1908	**+ 4207**
23.5-25, 16 PR (L-5) tires . . . . . J	+ 961	**+2119**	+ 764	**+ 1685**
Counterweight, Rear	+ 399	**+ 880**	+ 750	**+ 1654**

MODEL	931C Series II		935C Series II		943	
Flywheel Power	52 kW	70 HP	60 kW	80 HP	50 kW	80 HP
Operating Weight*	8047 ka	17.742 !b	8759 kg	19.311 ib	1[1] 690 ko	25.771 Ib
Engine Nodei	3204		3204		3204	
Rated Erigine RPM	2400		2400		2400	
Bore	114 mm	**4.5"**	114 mm	4.5"	114 mm	**4.5"**
Stroke	127 mm	**5"**	127 mm	5"	127 mm	5"
No. Cylinders	**4**		4		4	
Displacenent	5.2 L	**318** in^3	5.2 L	318 in^3	5.2 L	**318 in^3**
Speeds Forward,	km/h	mph	km/h	mph	km/h	**mph**
1st	3.0	1.8	3.0	1.8	0-9.5	**0-5.9**
2nd	5.7	3.5	5.7	3.5	**Infinitely**	
3rd	10.5	6.5	10.5	**6.5**	**Variable**	
Reverse*'						
1st	3.2	**2.0**	3.2	**2.0**	0-9.5	**0-5.9**
2nd	6.1	**37.8**	6.1	**3.8**	**Infinitely**	
3rd	11.2	**6.9**	11.2	**6.9**	Variable	
HydraulicCycle Time, Bucket Empty, in Seconds:						
Raise	**6.0**		6.0		7.2	
Dump	**2.7**		**2.7**		1,6	
Lower (Empty, Float Down)	3.1		3.1		2.2	
Total	**11.8**		**11.8**		**11.0**	
Track Rollers (Each Side)	**5**		5		**6**	
Width of Standard Track Shoe	356 mm	**14"**	355 mm	**14"**	360 mm	**14.17"**
Length of Track on Ground	1.90 m	**6'2.8"**	1.90 m	**6'2.8"**	2.149 m	**7'0"**
Ground Contact Area (With Std. Shoe)	1.35 m^2	**2094 in^2**	1.35 m^2	**2094 in^2**	1.55 m^2	**2398 in^2**
Ground Pressure	58.4 kPa	**8.5 psi**	63.6 kPa	**9.2 psi**	73.7 kPa	**10.7 psi**
Ground Clearance	308 mm	**12.1"**	308 mm	**12.1"**	336 mm	**13.2"**
Track Gauge	1.42 m	**4'8"**	1.42 m	4'8"	1.70 m	**5'7"**
Width Without Bucket	1.79 m	**5'10"**	1.79 m	**5*10"**	2.06 m	**6'9"**
Fuel Tank Refill Capacity	116 L	**30.6 U.S. gai**	116 L	**30**.6 U.S. gai	159 L	**42 U.S. gai**
Hydraulic System Refill Capacity	57 L	**15 U.S. gai**	57 L	**15** U.S. **gai**	58 L	**15.3 U.S. gai**

	LGP		LGP		**Equipped with Wide Track Shoe Option**	
(Specs that differ from above)	931C Series II		935C Series II		943	
Operating Weight	8168 kg	**18,007 lb**	No		11 388 kg	**26,207 lb**
Width of Track Shoe	635 mm	**25"**	**LGP**		460 mm	**18.11"**
Ground Contact Area	2.41 **m^2**	**3746 in^2**	**Model**		1.98 m^2	**3064 in^2**
Ground Pressure	33 kPa	**4.8 psi**			58.4 kPa	**8.5 psi**
Track Gauge	1.65 m	**5'5"**			1.70 m	**5 7"**
Width Without Bucket	—				2160 mm	**7'1"**

See Wheel Loader section of this book for surnmary of S.A.E. Guidelines for Loader Specifications, to which Caterpillar adheres.

'931C Series II weights for standard and LGP models include basic machine (General Arrangement Number), lubricants, coolant, full fuel tank, operator, generai purpose bucket, bucket teeth, and OROPS. Subtract 166 kg (367 lb) for 3-1 transmission. Operating weight of 931C LGP Series II (Direct Drive) is 8170 kg (18,012 lb). 935C Series II weights include basic machine (General Arrangement Number), lubricants, coolants, full fuel tank, operator, generai purpose bucket and bucket teeth and OROPS.

""931C Series II with one-speed reverse: 5.1 km/h (3.16 mph)

MODEL	953		963		973	
Flywheel Power	82 kW	110 HP	112 kW	150 HP	157 kW	210 HP
Operating Weight	14 098 kg	31,060 lb	18 366 kg	40,490 lb	24 902 kg	54,899 lb
Engine Model	3204		3304		3306	
Rated Engine RPM	2400		2200		2200	
Bore	114 mm	4.5"	121 mm	4.75"	121 mm	4.75"
Stroke	127 mm	5"	152 mm	6"	152 mm	6"
No. Cylinders	4		4		6	
Displacement	5.2 L	318 in^3	7.0 L	425 in^3	10.5 L	638 in^3
Speeds Forward,	km/h	mph	km/h	mph	km/h	mph
1st	0-10.35	0-6.4	0-10.1	0-6.0	0-10.3	0-6.4
2nd	Infinitely		Infinitely		Infinitely	
3rd	Variable		Variable		Variable	
Reverse*						
1st	0-10.35	0-6.4	0-10.1	0-6.0	0-10.3	0-6.4
2nd	Infinitely		Infinitely		Infinitely	
3rd	Variable		Variable		Variable	
Hydraulic Cycle Time, Bucket Empty, in Seconds:						
Raise	7.4		6.2		7.4	
Dump	1.5		1.3		1.4	
Lower (Empty, Float Down)	3.0		2.3		2.6	
Total	11.9		9.8		11.4	
Track Rollers (Each Side)	6		6		7	
Width of Standard Track Shoe	380 mm	15"	450 mm	17.7"	500 mm	19.7"
Length of Track on Ground	2.295 m	7'6"	2.454 m	8'1"	2.917 m	9'7"
Ground Contact Area (With Std. Shoe)	1.74 m^2	2704 in^2	2.21 m^2	3423 in^2	2.92 m^2	4522 in^2
Ground Pressure	78.2 kPa	11.3 psi	80.9 kPa	11.7 psi	83.0 kPa	12.0 psi
Ground Clearance	377 mm	14.8"	439 mm	17.0"	456 mm	18.0"
Track Gauge	1.80 m	5'11"	1.85 m	6'0.8"	2.08 m	6'10"
Width Without Bucket	2.18 m	7'2"	2.30 m	7'6"	2.58 m	8'6"
Fuel Tank Refill Capacity	192 L	51 U.S. gal	261 L	69 U.S. gal	356 L	94 U.S. gal
Hydraulic System Refill Capacity	58 L	15.3 U.S. gal	60 L	16 U.S. gal	60 L	16 U.S. gal

Equipped With Wide Track Shoe Option

(Specs that differ from above)	953		963		973	
Operating Weight	14 362 kg	31,661 lb	18 639 kg	41,092 lb	25 534 kg	56,293 lb
Width of Track Shoe	500 mm	20"	550 mm	21.7"	675 mm	26.6"
Ground Contact Area	2.30 m^2	3558 in^2	2.70 m^2	4184 in^2	3.94 m^2	6104 in^2
Ground Pressure	60.6 kPa	8.8 psi	67.2 kPa	9.7 psi	63.0 kPa	9.1 psi
Track Gauge	1.80 m	5'11"	1.85 m	6'0.8"	2.08 m	6'10"
Width Without Bucket	2300 mm	7'6""	2400 mm	7'10"	2755 mm	9'0"

See Wheel Loader section of this book for summary of SA.E. Guidelines for Loader Specifications, to which Caterpillar adheres.

Bucket:	MULTI-PURPOSE Bolt-on Segments & Long Teeth		GENERAL PURPOSE Bolt-on Cutting Edge		MULTI-PURPOSE Bolt-on Cutting Edge	
Capacity Rates (Nominal Heaped)	1.15 ni	1.5 yd	i .3 rr,	"i.7 yd	1.1 ò rri	1.5 yd³
Siruck	1.00 m³	1.30 yd³	1.14 rrr	1.49 yd³	1.00 rrr	1.30 **yd³**
Cutting Edge, Type	Straight		Straight		Straight	
Buckei Width-«	2256 mm	88.8"	2210 mm	87"	2256 mm	88.8"
Teeth	8, optional, bolt-on with replaceable tips.		8, optional, bolt-on with repiaceable tips.		8, optional, bolt-on with replaceable tips.	
Dump Ciearance @ Full Lift and 45° Dscharge	2522 mm	8'3"	2604 mm	8'7"	2522 mm	**8'3"**
Reach ai 45° Discharge Angle 2133 mm (7') Ciearance	1221 mm	**4'0"**	1261 mm	**4'2"**	1221 mm	**4'0"**
Reach <§ Full Lift and 45° Discharge	905 mm	**35.6"**	894 mm	**35.2"**	905 mm	**35.6"**
Digging Depth	183 mm	**7.2"**	133 mm	**5.3"**	183 mm	**7.2"**
Overall Length	5530 mm	**18'2"**	5301 mm	**17'2"**	5404 mm	**17'9"**
Overall Height	4455 mm	**14'7"**	4516 mm	**14'10"**	4455 mm	**14'7"**
Static Tipping Load**	6993 kg	**15,418 lb**	7994 kg	**17,623 lb**	7065 kg	**15,575 lb**
Breakout Force*	7763 kg	**17,118 lb**	8719 kg	**19,226 lb**	7821 kg	**17,245 lb**
Operating Weight**	12 377 kg	27,286 lb	11 702 kg	**25,798 lb**	12 320 kg	**27,162 lb**

-«Bolt-on teeth increase bucket width by 52 mm (2.0"). Bolt-on cutting edge increases bucket width by 17 mm (.67").
'Breakoutforce is measured 100 mm (3.94") behind tip of cutting edge with bucket hinge pin as pivot point.
"Operating weight includes coolant, lubricants, full fuel tank, ROPS cab, General Purpose bucket, and 80 kg (176 lb) operator.

Machine stability can be affected by thè addition of other attachments.

Bucket:	GENERAL PURPOSE Bolt-on Teeth		MULTI-PURPOSE Bolt-on Teeth		ROCK Weld-on Flush Teeth		STEEL MILL ARRANGEMENT Bare Cutting Edge	
Capacity, Rated (Nominal Heaped)	2.8 m^3	3.75 yd^3	2.6 m^3	**3.40** yd^3	2.8 m^3	3.75 yd^3	2.5 m^3	3.25 **yd^3**
Struck	2.41 m^3	**3.16** yd^3	2.19 m^3	2.87 yd^3	2.46 m^3	3.21 yd^3	2.03 m^3	2.65 **yd^3**
Cutting Edge, Type	Straight		**Straight**		Spade		**Straight**	
Bucket Width-*	2854 mm	**9'4"**	2710 mm	**8'11"**	2705 mm	**8'10.5"**	2714 mm	**8'11"**
Teeth	8, **optional, bolt-on with** replaceable **tips**		**8, optional, bolt-on** with replaceable tips		8, **optional**, weld-on **with** replaceable tips		**6, standard, weld-on with replaceable tips**	
Dump Clearance @ Full Lift and 45° Discharge	3340 mm	**10'11"**	3044 mm	**9'11"**	3014 mm	**9'10"**	2986 mm	**9'9.6"**
Reach @ 45° Discharge Angle, 2.133 m (7') Clearance	2006 mm	**6'7"**	1859 mm	**6'1"**	2023 mm	**6'8"**	1784 mm	**5'10"**
Reach @ Full Lift and 45° Discharge	1328 mm	**4'4"**	1287 mm	**4'2"**	1464 mm	**4'9"**	1237 mm	**4'1"**
Digging Depth	118 mm	**4.6"**	211 mm	**8.3"**	118 mm	**4.6"**	118 mm	**4.6"**
Overall Length	7123 mm	**22'4"**	7318 mm	**24'1"**	7296 m	**23'11"**	7572 mm	**2410"**
Overall Height	5735 mm	**19'0"**	5894 mm	**19'4"**	5726 mm	**18'9"**	5825 mm	**19'1.3"**
Static Tipping Load**	16 788 kg	**37,010 lb**	14 120 kg	**31,130 lb**	16 678 kg	**36,768 lb**	18 470 kg	**40,720 lb**
Breakout Force*	21 760 kg	**47,981 lb**	17 699 kg	**39,026 lb**	18 695 kg	**41,223 lb**	20 758 kg	**45,765 lb**
Operating Weight**	24 902 kg	**54,899 lb**	26 086 kg	**57,510 lb**	24 908 kg	**54,912 lb**	27 551 kg	**60,740 lb**

•* Bolt-on teeth increase bucket width by 63.8 mm (2.5"). Bolt-on cutting edge increases bucket width by 19 mm (.74").
'Breakout force is measured 100 mm (3.94") behind tip of cutting edge with bucket hinge pin as pivot point.
"Operating weight includes lubricants, full fuel tank, ROPS cab, General Purpose bucket, and 80 kg (**176** lb) operator.

Machine stability can be affected by thè addition of other attachments. Add or subtract thè following to/from machine operating weight and static tipping load:

	Change in Operating Weight		Change in Static Tipping Load	
	kg	lb	kg	lb
Remove ROPS cab	- **485**	**-1070**	- 545	**-1202**
ROPS canopy only (cab removed)	- 175	**- 385**	- 208	**- 459**
Ripper (includes rear hydraulic arrangement)	+ 1228	**+ 2707**	+ 2843	**+ 6268**
Air conditioner	+ 107	**+ 236**	+ 166	**+ 366**
Bumper	+ 151	**+ 332**	+ 345	**+ 761**
Wide track shoes	+ 632	**+ 1394**	+ 476	**+ 1050**
Long Teeth	+ 223	**+ 492**	- 305	**- 672**

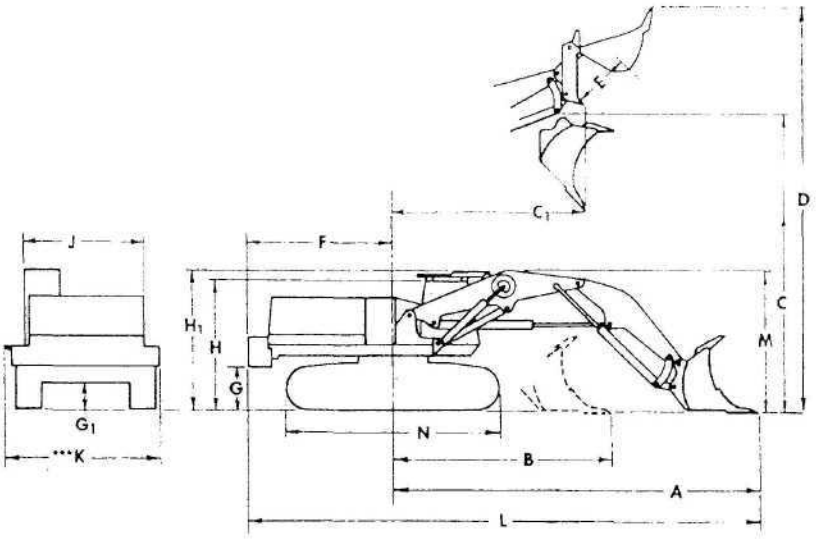

	235C FRONT SHOVEL				245B Series II FRONT SHOVEL			
	Front Dump		Bottom Dump		Front Dump		Bottom Dump	
Capa city, Heaped	2.3 m^3	**3.0 yd^3**	1.8 m^3	**2.38 yd^3**	3.8 m^3	**5.0 yd^3**	3.1 m^3	**4.0 yd^3**
Struck	1.9 m^3	**2.5 yd^3**	1.5 m^3	**1.9 yd^3**	3.4 m^3	**4.4 yd^3**	2.6 m^3	**3.5 yd^3**
Cutting Width	1899 mm	**74.8"**	1899 mm	**74.8"**	2350 mm	**92.5"**	2350 mm	**92.5"**
A Maximum reach @ grade	8.33 m	**27'4"**	8.13 m	**26'8"**	9.49 m	**31'2"**	9.37 m	**30'9"**
B Minimum reach @ grade	4.95 m	**16'3"**	4.75 m	**157"**	5.58 m	**18'4"**	5.46 m	**17'11"**
C Maximum dump height	5.03 m	**16'6"**	6.20 m	**20'4"***	5.639 m	**18'6"**	6.985 m	**22'11 "***
C[1] Reach at maximum dump height	5.26 m	**17'3"**	4.75 m	**157"**	6.30 m	**20'8"**	5.715 m	**18'9"**
Truck loading dump height**	3.81 m	**12'6"**	3.81 m	**12'6"**	5.03 m	**16'6"**	5.03 m	**16'6"**
Reach at truck loading dump height**	5.94 m	**19'6"**	6.53 m	**21'5"***	6.58 m	**217"**	7.19 m	**237"***
D Maximum height	9.17 m	**30'1"**	9.14 m	**300"**	10.29 m	**33'9"**	10.414 m	**34'2"**
E Maximum bucket throat opening	**Not Applicabile**		1.24 m	**4'1"**	**Not** Applicatile		1.448 m	**4'9"**
F Tail swing radius	3.30 m	**10'10"**	3.30 m	**10'10"**	3.810 m	**12'6"**	3.810 m	**12'6"**
G Ground clearance — counterweight	1.143 m	**3'9"**	1.143 m	**3'9"**	1.067 m	**3'6"**	1.067 m	**3'6"**
G[1] Ground clearance — frame	559 mm	**22"**	559 mm	**22"**	762 mm	**30"**	762 mm	**30"**
H Cab height	3.404 m	**11'2"**	3.404 m	**11'2"**	3.607 m	**11'10"**	3.607 m	**11'10"**
H[1] FOPS height	3.581 m	**117"**	3.531 m	**117"**	3.784 m	**12'3"**	3.734 m	**12'3"**
J House width	2.997 m	**9'10"**	2.997 m	**9'10"**	3.099 m	**10'2"**	3.099 m	**10'2"**
K Transport width	3.607 m	**11'10"**	3.607 m	**11'10"**	3.708 m	**12'2"*** **	3.708 m	**12'2"*** **
L Transport length	11.63 m	**38'2"**	11.43 m	**37'6"**	13.31 m	**43'8"**	13.18 m	**43'3"**
M Transport height	3.53 m	**11'7"**	3.53 m	**117"**	3.759 m	**12'4"**	3.759 m	**12'4"**
N Track length	5.05 m	**167"**	5.05 m	**167"**	5.613 m	**185"**	5.613 m	**18'5"**

'Bottom of bucket linkage.
"235C loading Cat 35-ton truck.
245B Series II loading Cat 35-ton truck.
Front Dump bucket at 45° discharge angle.
Bottom Dump bucket bulldozer vertical.

•"Transport width in narrow gauge position with 610 mm (24") shoes and catwalks installed. Reduces to 3455 m (11'4") v/idth over tracks with catwalks and counterweight removed.

Range Dimensions
• 235C • 245B Series II

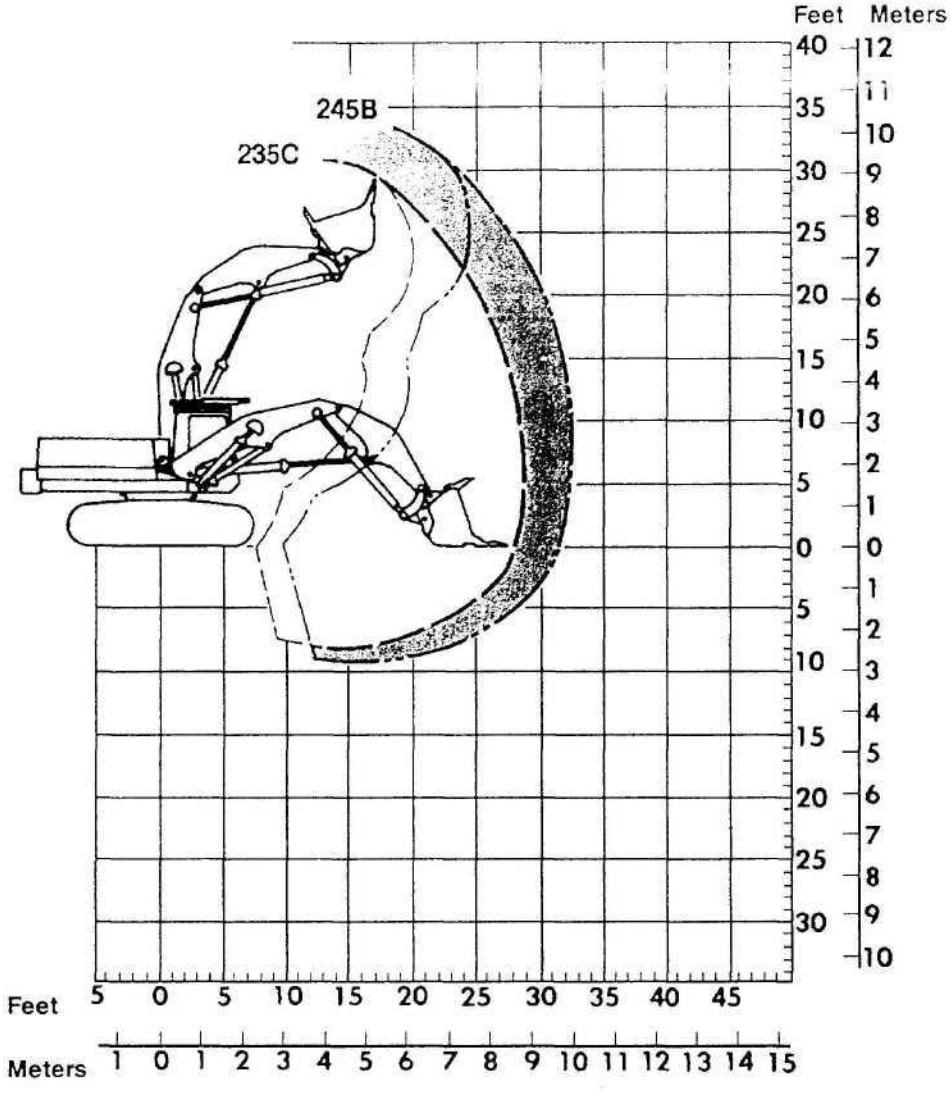

MODEL	235C FRONT SHOVEL		245B Series II FRONT SHOVEL	
Flywheel Power	186 kW	250 HP	268 kW	360 HP
Operating Weight*				
With Front Dump Bucket	42 010 kg	**92,530 lb**	66 280 kg	**146,000 lb**
With Bottom Dump Bucket	43 400 kg	**95,600 lb**	68 460 kg	**150,790 lb**
Bucket Capacity — Front Dump	2.3 m^3	**3 yd^3**	3.8 m^3	**5 yd^3**
Bottom Dump	1.8 m^3	**2.38 yd^3**	3.1 m^3	**4 yd^3**
Engine Model	3306		**3406**	
Rated Engine RPM	**2000**		**2100**	
No. of Cylinders	6		**6**	
Bore	121 mm	**4.75"**	137 mm	**5.4"**
Stroke	152 mm	**6"**	165 mm	**6.5"**
Displacement	10.5 L	**638 in^3**	14.6 L	**893 in^3**
Hydraulic Pump Output at Rated RPM	2 x 349 Umin	**2 x 92 gpm**	2 x 439 Umin	**2 x 116 gpm**
Rating Pressure	6890 kPa	**1000 psi**	6890 kPa	**1000 psi**
Relief Valve Setting:				
Implement Circuits	24 800 kPa	**3600 psi**	31 000 kPa	**4500 psi**
Travel Circuits	33 100kPa	**4800 psi**	31 000 kPa	**4500 psi**
Swing Circuits				
Accelerating	26 900 kPa	**3900 psi**	31 030 kPa	**4500 psi**
Decelerating	13 790 kPa	**2000 psi**	21 380 kPa	**3100 psi**
Pilot Circuits	2310 kPa	**335 psi**	2310 kPa	**335 psi**
Maximum Travel Speed at Rated RPM	3.2 km/h	**2.2 mph**	3.17 km/h	**1.97 mph**
Width of Standard Track Shoe	457 mm	**18"**	610 mm	**24"**
Overall Track length	5.03 m	**16'6"**	5.613 m	**18'S"**
Ground Contact Area with Std. Shoe	3.98 m^2	**6175 in^2**	5.90 m^2	**9132 in^2**
Track Gauge	2.69 m	**8'10"**	3.25 m	**10'8"**
Fuel Tank Retili Capacity	492 L	**130 U.S. gai**	682 L	**180 U.S. gai**

***Operating weight** includes coolant, lubricants, full fuel tank, standard shoes, bucket and operator.

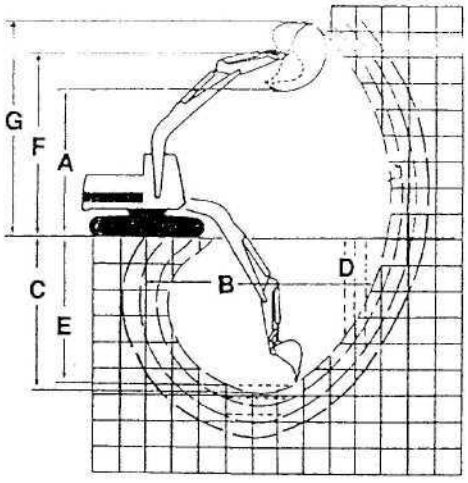

One-Piece Boom
Digging Envelope

- Standard shoes and undercarriage
- Excavation-type bucket

KEY:

- **A** Maximum loading height of bucket with teeth
- **B** Maximum reach at ground level
- **C** Maximum digging depth
- **D** Maximum vertical wall
- **E** Maximum depth of cut for 2.44 m (8') level bottom (straight clean up)
- **F** Maximum bucket hinge pin height
- **G** Maximum height, to bucket teeth at highest arc

	225D, 225D LC						231D Mass Excavation			
Stick	**1980 mm**	**6'6"**	**2440 mm**	**8'0"**	**3050 mm**	**10'0"**	**2300 mm**	**7'11"**	**2900 mm**	**9'6"**
	m	**ft**	m	ft	m	ft	**m**	**ft**	m	ft
A	5.83	**19'2"**	5.81	**19'1"**	6.03	**19'9"**	**6.29**	**20'8"**	6.52	**21'5"**
B	9.23	**30'4"**	9.57	**31'5"**	10.13	**33'3"**	**9.67**	**30'9"**	10.22	**337"**
C	5.95	**19'6"**	6.40	**21'0"**	7.01	**230"**	**6.07**	**19'11"**	6.67	**21'11"**
D	3.20	**10'6"**	3.28	**10'9"**	3.53	**117"**	**4.19**	**130"**	5.02	**16'6"**
E	**5.71**	**189"**	6.17	**20'3"**	6.81	**22'4"**	5.85	**192"**	6.48	**21'3"**
F	7.38	**243"**	7.36	**24'2"**	7.57	**24'10"**	**8.02**	**26'4"**	8.25	**27'1"**
G	8.47	**279"**	8.38	**27'6"**	8.54	**280"**	9.49	**311"**	9.76	**320"**

	231D, 231D LC General Purpose				235C					
Stick	**2900 mm**	**9'6"**	**3500 mm**	**11'6"**	**2400 mm**	**8'0"**	**2900 mm**	9'6"	3660 mm	**120"**
	m	ft	m	ft	m	ft	m	ft	m	ft
A	7.16	**23'6"**	7.40	**24'3"**	6.31	**208"**	6.44	**21'2"**	6.66	**2T10"**
B	10.64	**3411"**	11.20	**36'9"**	10.88	**35'9"**	11.30	**37'1"**	12.00	**39'5"**
C	6.94	**22'9"**	7.54	**24'9"**	6.97	**2210"**	7.43	**24'4"**	8.19	**26'10"**
D	5.29	**17'4"**	6.13	**201"**	4.79	**15'9"**	5.19	17'0"	5.88	**19'3"**
E	6.76	**22'2"**	7.37	**24'2"**	6.79	**22'3"**	7.27	23'10"	8.05	**26'5"**
F	8.73	**28'8"**	8.97	**29'5"**	8.19	**26'10"**	8.32	**27'4"**	8.55	**280"**
G	10.08	**33'1"**	10.35	**3311"**	9.55	**31'4"**	9.68	31'9"	9.90	**32'6"**

Range Dimensions
- 235C Trench Arrangement
- 245B Series II

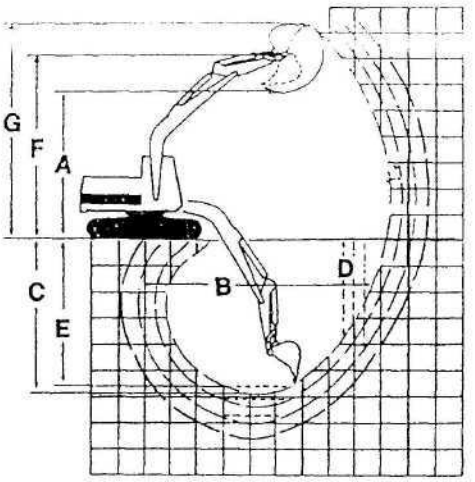

One-Piece Boom Digging Envelope
- Standard shoes and undercarriage
- Small profile bucket

KEY:

A Maximum loading height of bucket with teeth

B Maximum reach at ground level

C Maximum digging depth

D Maximum vertical wall

E Maximum depth of cut for 2.44 m (8') level bottom (straight clean up)

F Maximum bucket hinge pin height

G Maximum height, to bucket teeth at highest arc

235C Trenching Arrangement w/3660 mm (12) Stick

Carbody	Standard Gauge (S.A.)		Wide Gauge	
	m	ft	m	ft
A	6.68	22'11"	6.78	22'3"
B	11.99	39'4"	12.00	39'4"
C	8.18	26'10"	8.05	26'5"
D	5.87	19'3"	5.76	18'11"
E	8.03	26'4"	7.93	26'0"
F	8.56	28'1"	8.66	28'5"
G	9.91	32'6"	10.01	32'10"

245B Series II

Stick	2590 mm	8'6"	3200 mm	10'6"	4420 mm	14'6"	245B* Series 11 Deep Trenching Arrangement 4400 mm	14'6"	245B* Series II Heavy Lift Trenching Arrangement 4400 mm	14'6"
	m	ft	m	ft	m	ft	m	ft	m	ft
A	7.60	24'11"	7.48	24'7"	7.87	25'10"	9.63	31'7"	7.90	25'11"
B	12.41	40'9"	12.83	42'1"	13.94	45'9"	15.93	52'3"	14.14	46'5"
C	7.79	25'7"	8.40	27'7"	9.60	31'6"	10.76	35'4"	9.63	31'7"
D	5.07	16'8"	5.36	17'7"	6.46	21'2"	7.99	26'3"	6.36	20'11"
E	7.63	25'0"	8.24	27'1"	9.48	31'1"	10.65	34'11"	9.50	31'2"
F	9.82	32'3"	9.73	31'11"	10.09	33'1"	11.86	38'11"	10.12	33'3"
G	11.52	37'10"	11.35	37'3"	11.71	38'5"	13.59	44'7"	11.69	38'4"

*Equipped with standard carbody.

Shipping Dimensions
• 235C • 235C Wide Gauge Trencher, • 245B Series II • 245B Series II Deep Trencher, • 245B Series II Heavy Lift Trencher

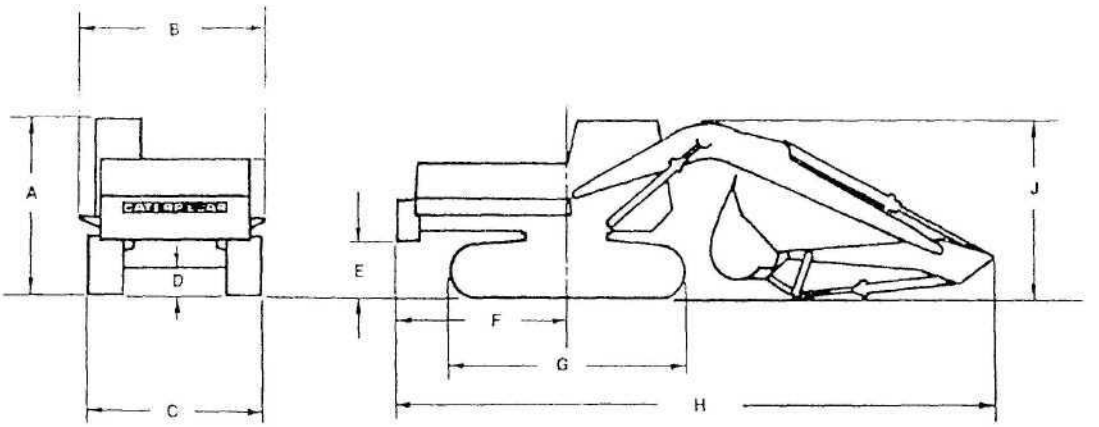

	235C		235C Wide Gauge Trencher		245B Series II		245B Series II Deep Trencher		245B Series II Heavy Lift Trencher w/Wide Gauge Carbody	
A	3.400 m	11'3"	3.400 m	117"	3.600 m	11'10"	3.600 m	11'10"	3.600 m	11-10"
B	3.600 m	11'10"	3.600 m	11'10"	3.600 m	11'10"	3700 m	12'2"	3.700 m	12'2"
C	3.450 m	11'4"	3.770 m*	12'5"#	3.610 m	11'10"	3.760 mt	12'4"t	4.220 *mt*	13'1O"t
D	530 mm	21"	530 mm	21"	760 mm	30"	760 mm	30"	760 mm	30"
E	1.120 m	44"	1.240 m	49"	1.120 m	44"	1.060 m	42"	1.060 m	42"
F	3.300 m	10'10"	3.410 m	11'3"	3.810 m	12'6"	3.920 m	12'11"	3.920 m	12'11"
G	5.020 m	167"	5.020 m	167"	5.610 m	18'5"	6.000 mt	19'8"t	6.000 mt	19'8"t
H	11.50m "	377"'*	11.60 m "	37'11"*'	12.82 mtt	42'0"tt	14.96 mtt	49'1"tt	13.44 mtt	44'1"tt
J	3.500 m"	1T4"-'	3.400 m"	117"*'	5.460 mtt	I7'11"tt	5.000 mtt	16'5"tt	4.850 mtt	15'11"tt

"Outside of carbody. narrow position.
'"w/3660 mm (12') stick.
tExtended U/C — Standard U/C available.
ttw/4420 mm (14'6") stick.
Jw/915 mm (36") shoes.

Model	245B Series II		245B Series II (Deep Trencher Arrangement)		245B Series II (Heavy Lift Trencher)	
'^wheérPower	268 kW	360 HP	268 kW	360 HP	268 kW	360 HP
«LratingWeighf	65 150 kg	143,500 lb	73 860 kg	162,680 lb	74 020 kg	163,030 lb
^Jket Capacity Range (heaped)	1.9-3.3 m^3	2.5-4.25 yd^3	1.9-2.3 m^3	2.5-3.0 yd^3	1.9-3.3 m^3	2.5-4.25 yd^3
Engine Model	3406		3406		3406	
'paied Engine RPM	2100		2100		2100	
^ of Cylinders	6		6		6	
Q/jfP „	137 mrn	5.4"	137 mm	5.4"	137 mm	5.4"
Stroke	165 rnm	6.5"	165 mm	6.5"	165 mm	6.5"
pisplacement	14.6 L	893 in^3	14.6 L	893 in^3	14.6 L	893 in^3
Max Implement Hydraulic Pump Output at Bated RPM	2 x 439 L/min	2 x 116 gpm	2 x 439 L/min	2 x 116 gpm	2 x 439 L/min	2 x 116 gpm
pelief Valve Settings:						
Implement Circuits	31 030 kPa	4500 psi	32 000 kPa	4650 psi	32 000 kPa	4650 psi
Heavy Lift (optional on 245)	34 500 kPa	5000 psi	35 200 kPa	5100 psi	35 200 kPa	5100 psi
Travel Circuits	31 030 kPa	4500 psi	32 000 kPa	4650 psi	32 000 kPa	4650 psi
Swing Circuits: Accelerate	31 030 kPa	4500 psi	32 380 kPa	4700 psi	32 380 kPa	4700 psi
Decelerate	21 380 kPa	3100 psi	21 380 kPa	3100 psi	21 380 kPa	3100 psi
Pilot Circuits	2310 kPa	335 psi	2310 kPa	335 psi	2310 kPa	335 psi
Maximum Drawbar Pulì	430 kN	95,800 lb	440 kN	98,110 lb	440 kN	98,060 lb
Maximum Travel Speed at Rated RPM	3.17 km/h	1.97 mph	3.17 km/h	1.97 mph	3.17 km/h	1.97 mph
VVidth of Standard Track Shoe	760 mm	30"	914 mm	36"	914 mm	36"
Overall Track Length Std.	5.613 m	18'5"	5.613 m	18'5"	5.613 m	18'5"
LC			6.00 m	19'9"	6.00 m	19'9"
Ground Contact Area with Std. U/C	7.4 m^2	11,415 in^2	8.8 m^2	13,698 in'	8.8 m^2	13,698 in'
Ground Contact Area with Ext. U/C			9.5 m^2	14,803 in^3	9.5 m^2	14,803 in^2
Track Gauge	2.84 m	9'4"	2.84 m	9'4"	3.30 m	10'10"
Extended	3.24 m	10'8"	3.24 m	10'8"	3.76 m	12'4"
Fuel Tank Retili Capacity	682 L	180 U.S. gai	682 L	180 U.S. gai	682 L	180 U.S. gai

'Operafing weighl includes coolant, lubricanls, full fuel tank, one-piece boom, long stick, small profile bucke'., operalor 75 kg (165 lb), 914 mm (36") shoes.

Noie: Certain models may not be available in ali Sales areas.
Specificalions may also vary by Sales area.
Contact your Caterpillar District Office for details.

Model	231D LC***		235C		235C (Trencher Arrangement)	
Flyv/heel Pov.'er	149 kW	200 HP	186 kW	250 HP	186 kW	250 HP
Operating Weight'	35 500 kg	78,100 lb	42 140 kg	92,820 lb	46 190 kg'•	101,750 Ib-.
Bucket Cspacity Range (heaped)	1.1-1.6 rrr?	1.4-2.1 yd³	1.0-2.3 m³	1.25-3.0 yd³	1.0-2.3 m³	1.25-3.0 yd i
Engine Model	3208		3306		3306	
Rated Engine RPM	2200		2000		2000	
No. of Cylinders	8		6		6	
Bore	114 mm	4.5"	121 mm	**4.75"**	121 mm	4.75"
Stroke	127 mm	5"	152 mm	**6"**	152 mm	6"
Displacement	10.4 L	636 in³	10.5 L	638 in³	10.5 L	638 in³
Max. Implement Hydraulic Pump Output at Rated RPM	2 x 229 L/min	2 x **60.5 gpm**	2 x 349 L/min	**2 x 92 gpm**	2 x 349 L/min	2 x 92 gpm
Relief Valve Settings:						
Implement Circuits	29 660 kPa	**4300 psi**	29 660 kPa	**4300 psi**	29 660 kPa	4300 psi
Heavy Lift	33 100 kPa	**4800 psi**	33 100 kPa	**4800 psi**	33 100 kPa	4800 psi
Travel Circuits	33 100 kPa	**4800 psi**	33 100 kPa	**4800 psi**	33 100 kPa	4800 psi
Swing Circuits:						
Accelerate	19 980 kPa	**2900 psi**	26 900 kPa	**3900 psi**	26 900 kPa	3900 psi
Decelerate	—		13 790 kPa	**2000 psi**	13 790 kPa	2000 psi
Pilot Circuit	2310 kPa	**335 psi**	2310 kPa	**335 psi**	2310 kPa	335 psi
Maximum Drawbar Pulì	300 kN	**67,300 lb**	313 kN	**70,310 lb**	310 kN	69,770 lb
Maximum Travel Speed at Rated RPM	5.48 krr./h	**3.39 mph**	3.65 km/h	**2.27 mph**	3.65 km/h	2.27 mph
Width of Standard Track Shoe	813 mm	**32"**	760 mm	**30"**	760 mm	30"
Overall Track Length	5.23 m	**17'2"**	5.03 m	**16'6"**	5.03 m	16' 6'
Ground Contact Area with Std. Shoe and Std. Undercarriage	7.43 rrr?	**11,520 in!**	6.6 m²	**10,290 in²**	6.6 m²	10,290 in²
Track Gauge	2.64 m	8'**8"**	2.69 m	**8'10'**	—	
S.A. Carbody	—		—		2.69 m	8'10"
Wide Gauge Carbody	—		—		3.25 m	**10'1**0"
Optional Narrow Gauge	—		—		—	
Fuel Tank Refill Capacity	400 L	**105 U.S. gai**	492 L	**130 U.S. gai**	492 L	**130** U.S. gai

"Operating weighl includes coolant. lubricants. **futi** fuel tank, one-piece boom, long stick, smail profiie bucket, operalor 75 kg (165 lb). wide shoes
' "Operating weighl with wide carbody. Standard Gauge (S.A.) Carbody is <-5 100 kg **(99,340** lb).
•"Specifications shov/n are for U.S. source rnachine.

Note: Certain models may not be available in al! Saies areas.
Specifications may a!so vary by Sales are3.
Ccrtact your Caterpillar District Office for details.

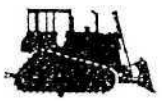

MODEL	D9N		D10N		D11N	
Flywheel Power	276 kW	370 HP	338 kW	520 HP	575 kW	770 HP
Operat ing Weight*	42 542 kg	93,789 lb	57 410 kg	126,565 lb	95 846 kg	211,302 lb
Engine Mode'	3408		3412		3508	
Rated Engine RPM	1900		1900		-,80C	
No. of Cylinders	8		12		8	
Bore	137 mm	5.4"	137 mm	5.4"	170 mm	6.00"
Stroke	152 mm	6"	152 mm	6"	190 mm	7.4 0"
Displacement	18 L	1099 in^3	27 L	1649 in^3	34.5 L	2104 In^3
Track Follers (Each Side)	8		8		8	
Width of Standard Track Shoe	610 mm	24"	610 mm	**24"**	710 mm	*V.U"*
Lengtri of Track on Ground	3.47 m	11'4.8"	3.87 m	12'8.5"	4.44 m	14'7"
Ground Contact Area (W/Std. Shoe)	4.24 m^2	6571 in^1	4.73 m^2	7326 in^2	6.32 m^2	*y&()0* In'
Track Gauge	2.25 m	7'4.6"	2.55 m	8'4"	2.89 m	*9'6"*
GENERAL DIMENSIONS:						
Heighl (Stripped Top)*'	2.93 m	97.3"K	3.197 m	10'5.9"	3.50 m	11'6"►
Heighl (To Top of ROPS Canopy)	3.91 m	129.8"*-		—		—
Height (To Top of ROPS)	—		4.24 m	**13'11''•**	4.56 m	14'11"►
Overall Length (With S Biade)	6.87 m	22'6.4"	7.76 m	**25'5.3"**	8.39 m	27'0"
(Without Biade)	5.17 m	**16'11.5"**	5.59 m	18'3.9"	6.16 m	*20' 3"*
Width (Over Trunnions)	3.25 m	**10'8"**	3.72 m	12'2.2"		
Width (W/O Trunnions — Std. Shoe)	2.89 m	9'5.9"	3.30 m	10'9.8"	3.78 m	12'5"
Ground Clearance	505 mm	**19.9"B**	615 mm	**24.2"B**	623 mm	24.5i"I
Biade Types and Widths:						
Straight	—		—		5.65 m	10'G'
Angle Straight/Angled	—		—		—	
Universal	4.66 m	15'3.4"	5.26 m	17'3.2"	6.41 m	21'0"
Semi-U	4.32 m	14'1.9"	4.86 m	**15'11.4"**		—
"P" Straight/Angled	—		—		—	
Fuel Tank Refill Capacity	792 L	209 U.S. gai	1023 L	**270 U.S.** gai	1490 L	394 U.S. gal

•Operating Weight includes ROPS canopy, operator, lubricants, coolant, tuli fuel tank, hydraulic controls and fluids, straight dozer with tilt. baO--"I' seat belts, lights, rigid drawbar and front towing device.
— D9N-D11N include track guides.
— D9N and D10N equipped with SU-blades.
— D11N equipped with 813 mm (32") extreme service tracie shoes.
— D11N includes 11U Bulldozer, single shank ripper and ROPS cab.
•'Height (stripped top) — without ROPS canopy, exhaust, seat back or other easily removed encumbrances.
• Dimensions to fiat of shoe. For dimensions to grouser tips add 84 mm (3.3") for D9N, add 93 mm (3.7") for D10N and 101 mm (4") for D I ' "
• SAE J1234

MODEL	D6H Series II		D7H Series II		D8N	
Fly.vh;al Power	123kW	165 HP	160 kW	215 HP	212 kW	285 HP
Operaing Weight*						
(Fover Shift)	17 761 kg	39,075 lb	24 195 kg	53,470 lb	36 842 kg	81,222 lb
(Direct Drive)	17 765 kg	39,170 lb	24 117 kg	53,298 lb	—	
(Power Shift Differenza] Steer)	17 838 kg	39,325 lb	24 469 kg	54,073 lb		
Engine Model	3306		3306		3406	
Rai^oFr¢'." P^V	1800		2100		2100	
No . o'Cylinders	6		6		6	
Bore	121mm	4.75"	121 mm	4.75"	137mm	5.4"
Stroke	152mm	6"	152 mm	6"	165mm	6.5"
Dispiacement	10.5 L	638 in^3	10.5 L	638 in^3	14.6 L	893 in^3
TrackRollers (Each Side)	6		7		8	
Widthof Standard Track Shoe	560mm	22"	560mm	22"ES	560mm	22"
Lengtri of Track on Ground**	2.62 m	**87.5"**	2.90 m	9'6"	3.21 m	**10'6"**
Ground Contact Area (W/Std. Shoe)	2.94 m^2	**4564 in^2**	3.24 m^2	5016 in^3	3.6 m^2	**5553 in^2**
TrackGauge	1.88 m	**6'1"**	1.98 m	**6'6"**	2.08 m	**6'10"**
GENERAL DIMENSIONS:						
Height (Stripped Top)***	2.26 m	**7'5"**	2.44 m	**8'0"**	2.59 m	**8'6"^**
Height (To Top of ROPS Canopy)	—		3.33 m	**10'11"**	3.43 m	**11'3"****
Height (To Top of Cab ROPS)	3.12 m	**10'3"**	3.42 m	**11'3"**	—	
Overall Length (With S Biade)	5.01 m	**16'5"**	5.56 m	**18'3"**	6.24 m	**20'6"**
(Without Biade)	4.06 m	**13'4"**	4.62 m	**15'2"**	4.93 m	**16'2"**
Width (Over Trunnion)	2.64 m	**8'8"**	2.86 m	**9'5"**	3.04 m	**10'**
Width (W/O Trunnion — Std. Shoe)	2.34 m	**7'8.1"**	2.54 m	**8'4"**	2.64 m	**8'8"**
Ground Clearance	376mm	**14.8"**	406mm	**16"**	532mm	**20.9"«**
Biade Types and Widths:						
Straight	3.35 m	**110"**	3.91 m	**12'10"**	—	
Angìe Straight	4.16 m	**13'7.8"**	4.49 m	**14'9"**	4.96 m	**16'3"**
Angled	3.78 m	**124.7"**	4.08 m	**13'5"**	—	
Universal	—		3.96 m	**13'1"**	4.26 m	**14'0"**
Semi-U	3.26 m	**10'8.4"**	3.66 m	**12'1"**	3.94 m	**12'11"**
"P" Straight/Angled	—		—		—	
Fue! Tank Refill Capacity	337 L	**89 U.S.** gai	488 **L**	**129 U.S.** gai	488 L	**129 U.S.** gai

•Operating Weight includes ROPS canopy, operator, lubricants, coolant, full fuel tank, hydraulic controis and (luids, D6H Series 11 & D7H Series II SU-blade. rigid drawbar. D8N includes back-up alarm, seat belts, lights, front towing device and standard service crankcase guards.
— D6H Series II & D7H Series II include full track roller guards. D7H Series II include end track guiding guards.
— D8N includes track guides.
— D8N equipped with 24" MS shces, single shank ripper, and SU-blade.
* "D6H Series II with extended undercarriage: length of track on ground 2.78 m (9'1.5"). ground contact area 3.11 m^2 (4804 in^2) with 560 mm (22") track D7H Series II with extended undercarriage: length of track on ground 3.07 m **(10'1** ") ground contact area 3.43 m^2 (5324 In^2) with 560 mm (22") extreme service track.
•Height (stripped top) — without ROPS canopy, exhaust, seat back or other easily removed encumbrances.
>- Dimensions to fiat of shoe. For dimensions to grouser tips add 71.1 mm (2.8") for D7H Series 11, and add 78 mm (2.6") for D8N with MS shoes and 6 mm (3.3") for D8N with ES shoes.
• SAE J1234.

ESTIMATED DOZING PRODUCTION • Semi-Universal Blades • D7H through D11N

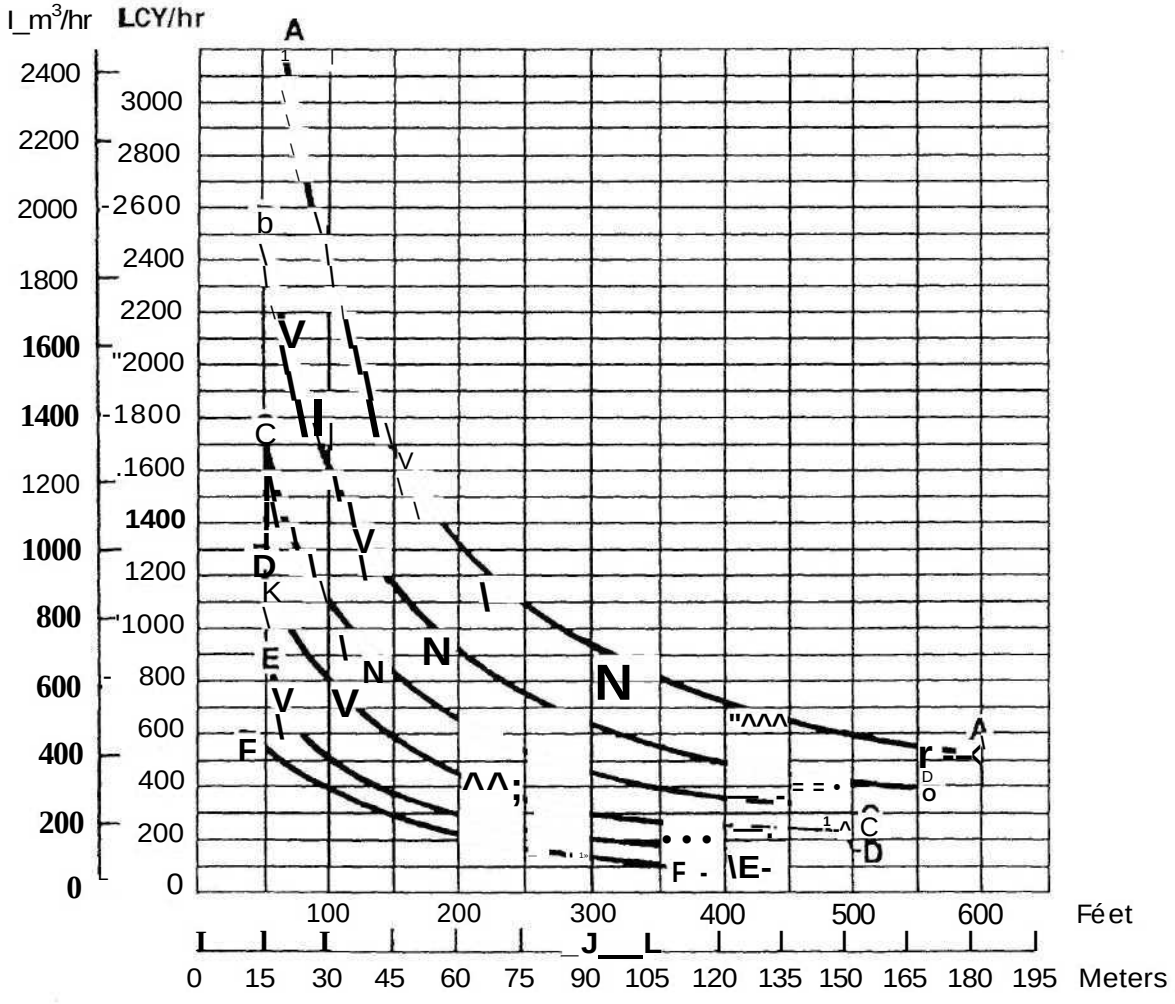

AVERAGE DOZING DISTANCE

CEY

^- D11N-11SU
ì - D10N-10SU
'- D9N-9SU
}- D8N-8SU
: - D7H-7SU

NOTE: This chart is based on numerous field studies made under varying job conditions. Refer to correclion factors lol-lov/ing Ihese charts.

General summary- Dneumatic crawlers

Crawler	Boom System	Rock drill	Type of rotation	Hole diameter renge		Drill steel type, diameter		Drill steel maximum length		Main application
				mm	(In)	mm	(in)	mm	(ti)	
ROC 301-01		BBE 57	S	64-89	(2',2-3'/2)	EXT 38	(V-2)	3 050	(10)	P+C
				76-115	(3-41-2)	EXT 45	(114)	3 050	(10)	P-i-C
ROC 301-02		BBC 120F	H	48-64	(17,8-21/2)	EXT 32	(11-4)	3 050	(10)	P+C
				64-89	(21/4-3 V2)	EXT 38	(112)	3 050	(10)	P+C
ROC 301-03		BBC 100F	R	35-40	(1 3,8-1137.64)	INT 25	(1)			e
				48-64	(17/B-2V2)	EXT 32	(1 V4))	3 050	(10)	P+C
F-.OC 5" "-[••		[illegible]	[illegible]	L- -fa.	r.Z:---T.-	EXT 39	[illegible]	3 050	(10?	D - C
				64-89	(2 V7-31/2)	EXT 38	(H2/	3 05&	(io;	P - C
ROC 301-05		COP 115EB	S	35-41	(U3-137/E4)	INT 25	(1)			e
				48-64	(17/8-212)	E 32	(11/4)	3 050	(10)	P-rC
ROC 302-00	2xF	BBC24DS-05	R	27-40	(1 V16-137,B4)	INT 22	(7B)			e
				35-40	(118-137,E4)	INT 25	(1)			e
				35-45	(13,8-13/4)	EXT 25	(1)	3 050	(10)	e
ROC 302-04	2xF	BBC 100F	R	35-40	(13-3-137,64)	INT 25	(1)			e
				48-64	(17,8-2V2)	EXT 32	(11/4)	3 050	(10)	e
ROC 302-05	2xF	COP115EB	S	35-40	(1IB~137,54)	INT 25	(1)			e
				48-64	(17/6-21,2)	EXT 32	(1V4)	3 050	(10)	e
ROC 311-00	1xF	BBC24DS-05	R	27-40	(11/16-137,64)	INT 22	(7-B)			e
				35-40	(118-137,64)	INT 25	(1)			e
				35-45	(13/6-13/4)	EXT 32	(11/4)	3 050	(10)	e
ROC 311-04	1xF	BBC 100F	R	35-40	(1IB-137,64)	INT 25	(1)			e
				48-64	(1 7/8-2'/2)	EXT 32	(V/4)	3 050	(10)	e
ROC 311-05	1xF	COP115EB	S	35-40	(118-137,64)	INT 25	(D			e
				48-64	(17,8-2V2)	EXT 32	(1V4)	3 050	(10)	e
ROC 601-00		BBE 57	S	64-89	(21/2-31/2)	EXT 38	(11/2)	3 660	(12)	P->C
				76-115	(3-4V2)	EXT 45	(11/4)	3660	(12)	P+C
ROC 601-02		COP131EB	S	48-64	(V/6-2',7)	EXT 32	(1V4)	3 050	(10)	P+C
				64-89	(21/2-31/2)	EXT 38	(1V2)	3 050	(10)	P+C
ROC 601-03		COP 150EB	S	64-89	(21/2-31/2)	EXT 38	(11/2)	3 050	(10)	P+C
				76-115	(3-4V2)	EXT 45	(13/4)	3 050	(10)	P+C
Down-the-hole drill rlgs										
ROC 304		COP 42	S	105-127	(41/6-5)	EXT 7589	(3/31/2)	3 000	(9.8)	p
				105-140	(41/8-5V2)	EXT 76-83	(3/3V2)	3 000	(9-8)	e
ROC 306		COP 42	S	105-127	(41/8-5)	EXT 75ii3	(3/31,7)	1 500	(4.9)	p
				105-140	(41/8-5 V2)	EXT 7&89	(3/31/2)	1 500	(4.9)	e
ROC 306		COP 62	S	152-177	(6-7)	EXT 114	(4V2)	1 500	(4.9)	p
				152-216	(6-8V2)	EXT 114	(41/2)	1 500	(4.9)	e
ROC 604		COP 42	S	105-127	(41/6-5)	EXT 75 39	(3/31/7)	3 000	(98)	p
				105-140	(4i/8-5'/2)	EXT 75-89	(3/3V2)	3 000	(9-8)	p
ROC 606		COP 42	S	105-127	(41/8-5)	**EXT** 7^89	(3/3V2)	3 000	(9.8)	p
				105-140	(4V6-5V2)	EXT 7589	(3/3V2)	3 000	(9.8)	e
ROC 606		COP 62	S	152-177	(6-7)	EXT 114	(4V2)	3 000	(9.8)	p
				152-216	(6-8'/2)	EXT 114	(41/2)	3 000	(9.8)	e

R = riffle-bar rotation
S=separate rotation
EXT = extension drill steel/extension drill pipe
INT=integral drilling
P = production drilling
C=civil engineering
F = folding boom (boom extension)

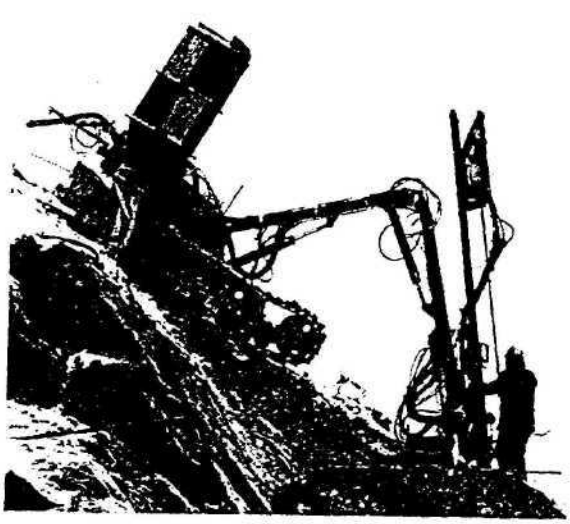

ROC 311

Crawler drills with pneumatic and hydraulic rock drills

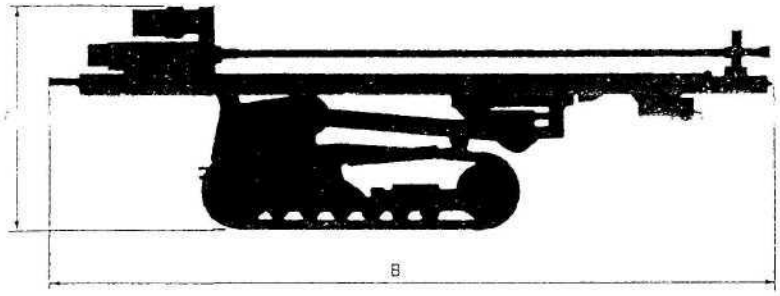

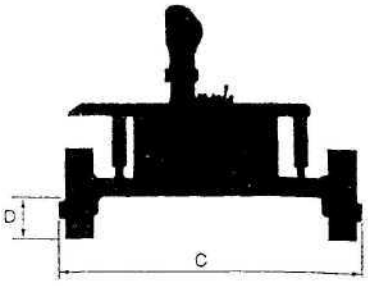

Rig	A Maximum height in transport position mm	B Total length of equipment mm	C Width mm	D Ground clearance mm	Climbing ability without compressor	Total mass kg	Feed	Rock drill
ROC 301-01	1 825	5 430	2 200	350	30°	3 400	BMM 35K 257	BBE 57
ROC 301-02	1 670	5 200	2 200	350	30°	3 300	BMM 35K 157	BBE 120F
ROC 301-03	1 670	5 200	2 200	350	30°	3 300	BMM 35K 157	BBE 100F
ROC 301-04	1 720	5 430	2 200	350	30°	3 420	BMM 35K 130	COP 131EB
ROC 301-05	1 720	4 570	2 200	350	30°	3 200	BMM 35K 115	COP 115EB
ROC 302-00	1 900–2 900	7 000–7 700	2 200	370	30°	4 090	BMM 300	BBC 24DS-05
ROC 302-04	1 900–2 900	7 000–7 700	2 200	370	30°	4 140	BMM 302	BBC 100F
ROC 302-05	1 900–2 900	7 000–7 700	2 200	370	30°	4 470	BMM 315	COP 115EB
ROC 304	1 720	5 430	2 200	350	30°	3 370	BMM 35K 859	COP 42/BBR 4
ROC 306	2 100	3 400	1 400	350	30°	3 800	BMM 36K 659	COP 62/COP 42/BBR 6
ROC 311-00	1 900–2 900	7 000–7 700	2 200	370	30°	7 560	BMM 300	BBC 24DS-05
ROC 311-04	1 900–2 900	7 000–7 700	2 200	370	30°	7 640	BMM 302	BBC 100F
ROC 311-05	1 900–2 900	7 000–7 700	2 200	370	30°	7 760	BMM 315	COP 115EB
ROC 601-00	1 750	5 630	2 200	310	30°	4 380	BMM 36K 258	BBE 57***)
ROC 601-02	1 725	5 630	2 200	310	30°	4 410	BMM 36K 130	COP 131EB
ROC 601-03	1 560	5 630	2 200	310	30°	4 480	BMM 36K 150	COP 150EB
ROC 604	2 050	5 630	2 200	310	30°	4 680	BMM 36K 854	COP 42/BBR 6
ROC 604-01*)	2 050	7 170	2 200	310	30°	5 240	BMM 36K 855	COP 42/BBR 6
ROC 606	2 080	5 630	2 500	310	25°	6 000	BMM 36K 658	COP 62/42**/BBR 6
ROC 712H-00	2 400	6 760	2 410	350	30°	7 500	BMM 35K 712-01	COP 1036HB
ROC 712H-01	2 800	9 600	2 410	350	30°	7 500	BMM 35K 712-01	COP 1036HB
ROC 810H-00	2 500	7 300	2 500	370	30°	8 400	BMM 36K 810	COP 1038HB
ROC 810H-01	3 150		2 500	370	30°	9 000	BMM 36K 810	COP 1038HB
ROC 820H	2 870	9 700	2 500	370	15°	8 700	BMM 36K 820	COP 1038HB
ROC 820HE	2 900	9 700	2 500	370	15°	8 700	BMM 36K 820	COP 1038HB
ROC 920HC	3 325	9 700	2 900	320	15°	15 800	BMM 36K 820	COP 1038HB
ROC 920HCE	3 325	9 700	2 900	320	15°	15 800	BMM 36K 820	COP 1038HB

*) complete for Odex drilling with Odex 115. Foam flushing equipment 3176 7265-90 has to be ordered separately if required
**) COP 42 as optional
***) BBE 53 as optional