POLITECNICO DI TORINO
ESAMI DI STATO PER L'ABILITAZIONE ALL'ESERCIZIO
DELLA PROFESSIONE DI INGEGNERE DELL'INFORMAZIONE

I Sessione 2018 - Sezione A
Settore dell'Informazione

Prova PRATICA del 23 luglio 2018

Il Candidato svolga uno a scelta fra i seguenti temi proposti.
Gli elaborati prodotti dovranno essere stilati in forma chiara, ordinata, sintetica e leggibile.
La completezza, l'attinenza e la chiarezza espositiva costituiranno elementi di valutazione.

Tema n. 1

Il sonno è un meccanismo essenziale per il mantenimento della salute sia mentale che fisica. Il sonno svolge funzioni riparatrici per il cervello e il corpo. La carenza di sonno è un fattore di rischio per diverse disfunzioni metaboliche, come ipertensione, diabete mellito, malattie cardiovascolari, ecc.
Risultati di uno studio recente hanno rivelato che un terzo della popolazione umana soffre di vari disturbi del sonno.
La polisonnografia (PSG) è il metodo più comunemente utilizzato per la valutazione oggettiva del sonno.
Tale esame prevede un monitoraggio notturno del sonno che include

- Elettroencefalografia (EEG) – 3 canali: F4-C4-O2
- Elettrooculografia (EOG) – 2 canali
  - **Nota:** Il segnale EOG viene acquisito mediante due coppie (una per lato) di elettrodi periorbitali superficiali, Il segnale EOG ha una dinamica tra 0,1 e 1,0 mV e una banda compresa tra 0,1Hz e 30Hz
- EMG di superficie dei muscoli delle gambe e delle braccia
- Flusso oro-nasale rilevato tramite un termoresistore
  - **Nota**: un termistore è un resistore il cui valore di resistenza varia con la temperatura. $R_T = R_o(1+\alpha T)$ dove: R_T = resistenza alla temperatura T; R_o = resistenza alla temperatura 0°C; α= coefficiente di proporzionalità caratteristico del termistore [$°C^{-1}$];
- Respiro toracico e addominale registrato tramite estensimetri
  - **Nota**: un estensimetro è un resistore il cui valore di resistenza varia con la deformazione a cui è sottoposto. $\Delta R/R=K\Delta L/L$ dove: R = resistenza a riposo; L = lunghezza del sensore a riposo. K= sensibilità dell'estensimetro.

Dai segnali acquisiti vengono estratte diverse variabili per valutare la normalità o la patologia.
In particolare, le diverse fasi del sonno sono caratterizzate dalla presenza di alcuni ritmi EEG e dall'assenza di altri. La relazione tra gli stadi del sonno e i ritmi EEG è nella Tabella 1. In presenza di patologie si verificano cambiamenti nel contenuto di frequenza dei segnali EEG del sonno.

Segue>>>

TABELLA I Relazioni tra fasi del sonno e ritmi EEG.

Sleep Stage	EEG Rhythms Contained
Awake	Beta, Alpha
Stage I	Alpha, Theta
Stage II	Alpha, Theta
Stage III	Delta
Stage IV	Delta

Bande EEG: δ: 0.5–3.5 Hz; θ: 3.5–7 Hz; α: 7–14 Hz; β: 14–30 Hz

Si vuole realizzare un sistema per la polisonnografia.

Il candidato:

1. Progetti e descriva il sistema complessivo a livello di schema a blocchi. Nel caso di dati non noti il candidato effettui delle scelte di dimensionamento dei blocchi interessati riportando i criteri adottati a supporto di tali scelte.
2. Selezioni due delle grandezze elettrofisiologiche/meccaniche acquisite dal sistema definito al punto 1 e progetti la catena di amplificazione per questi segnali a livello di schema a blocchi giustificando le scelte progettuali.
3. Scriva il codice matlab che permetta di calcolare la ripartizione della potenza media del segnale EEG nelle bande δ, θ, α, β giustificando la scelta del metodo scelto.
4. Progetti un filtro digitale per la rimozione del segnale EMG dal segnale ECG riportando il codice matlab e giustificando le scelte.
5. Progetti un filtro digitale per la rimozione dell'interferenza di rete (50Hz) dal segnale EMG riportando il codice matlab e giustificando le scelte.
6. Discuta la classificazione del dispositivo medico e imposti un programma di manutenzione ordinaria elencando i test più importanti da fare, la strumentazione necessaria e i range di accettabilità delle diverse misure.

Tema n. 2

Si vuole progettare un sistema di *cruise control* per un autoveicolo.

L'obiettivo è progettare un controllore digitale in retroazione che permetta all'autoveicolo di raggiungere una determinata velocità di crociera partendo da fermo, rispettando opportuni requisiti di comfort ed efficienza.

Definizione del modello

Si consideri il seguente modello semplificato per la velocità longitudinale *v(t)* (m/s) dell'autoveicolo:

$m\dot{v}(t) + cv(t) = F(t) - F_d$

dove t è la variabile temporale $(t \geqslant 0)$; m (kg) è la massa dell'autoveicolo; c (kg/s) è il coefficiente d'attrito; F (N) è la forza equivalente di trazione applicata al veicolo e F_d (N) è una forza di disturbo (dovuta ad attrito di rotolamento e pendenza delle strada) supposta costante.

Si consideri un autoveicolo con massa pari a $m = 1000$ kg, $c = 30$ kg/s e massima forza di trazione, ad una certa marcia prefissata, pari a $F = 1200$ N. Si verifichi che la funzione di trasferimento del sistema così descritto è la seguente:

$$G(s) = \frac{1}{30 + 1000s}$$

Definizione dell'architettura del sistema di controllo

Disegnare la struttura del sistema di controllo che si intende progettare mediante schema a blocchi. In particolare, si mettano in evidenza i blocchi del sistema da controllare, del controllore, dell'attuatore, dei dispositivi di conversione e la presenza del disturbo.

Progetto del controllore

Si progetti un controllore digitale in grado di soddisfare i seguenti requisiti:

1) riferimenti costanti di velocità devono essere inseguiti con errore stazionario nullo;
2) il sistema controllato, per motivi di comfort, deve presentare adeguate caratteristiche di smorzamento (ad esempio, la sovraelongazione massima nella risposta al gradino deve essere inferiore al 10%);
3) il transitorio nella risposta al gradino si deve estinguere in un tempo sufficientemente piccolo (ad esempio, con un tempo di salita intorno ai 3 s ed un tempo di assestamento intorno a 7 s);
4) il sistema deve essere astatico per disturbi F_d costanti.

Per semplicità, trasduttori e attuatori possono essere considerati con dinamica trascurabile e guadagno unitario e si possono trascurare altre fonti di disturbo diverse da F_d.

Nella definizione del controllore digitale, si descrivano e motivino adeguatamente le scelte di parametri, algoritmi e dispositivi utilizzati per la discretizzazione (per esempio, frequenza di campionamento, dispositivi di conversione analogico/digitale e digitale/analogico).

L'eventuale tracciamento di diagrammi di Bode e/o di Nichols può essere svolto sugli appositi fogli forniti.

Carta semilogaritmica a 6 decadi

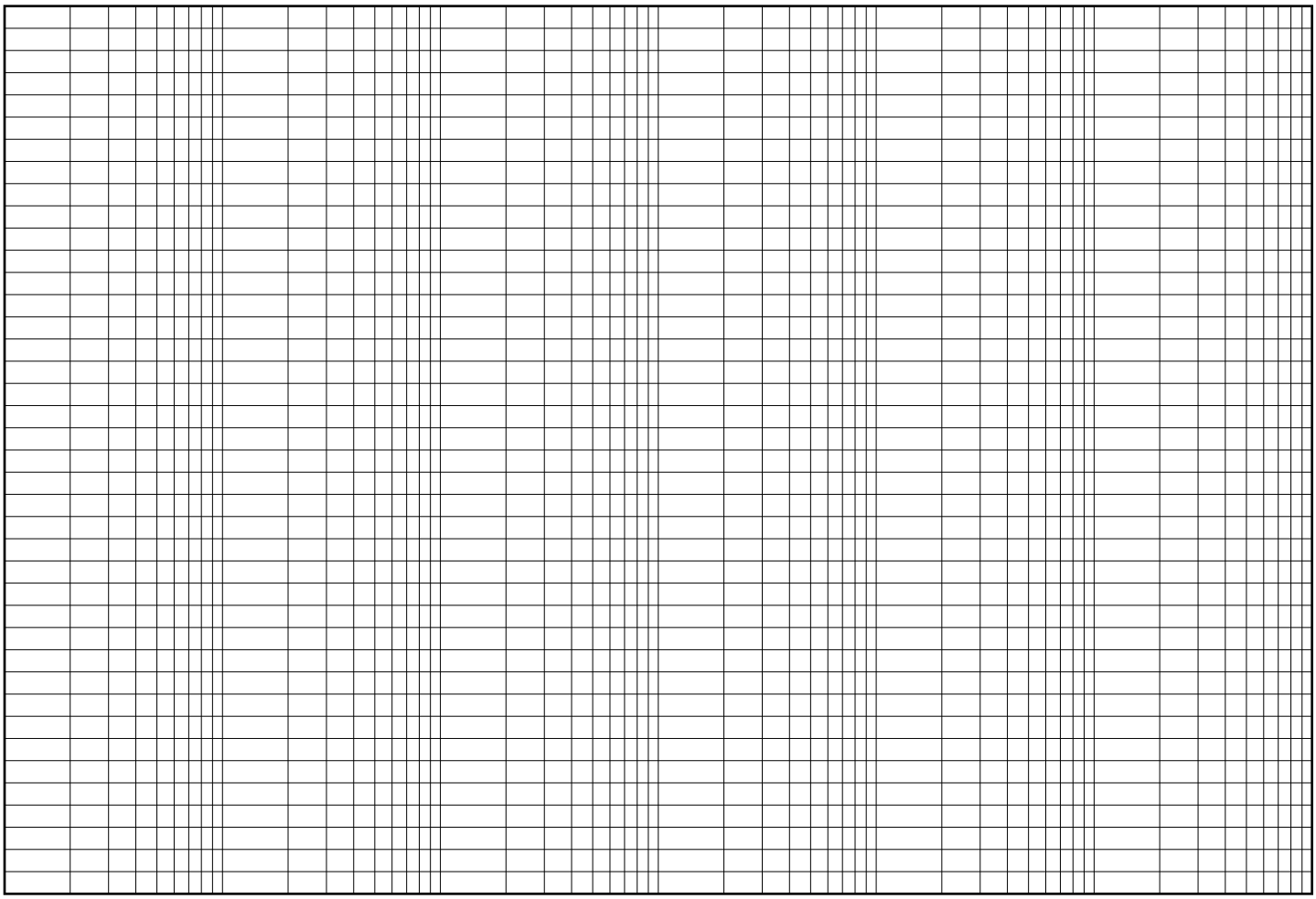

Pulsazione ω

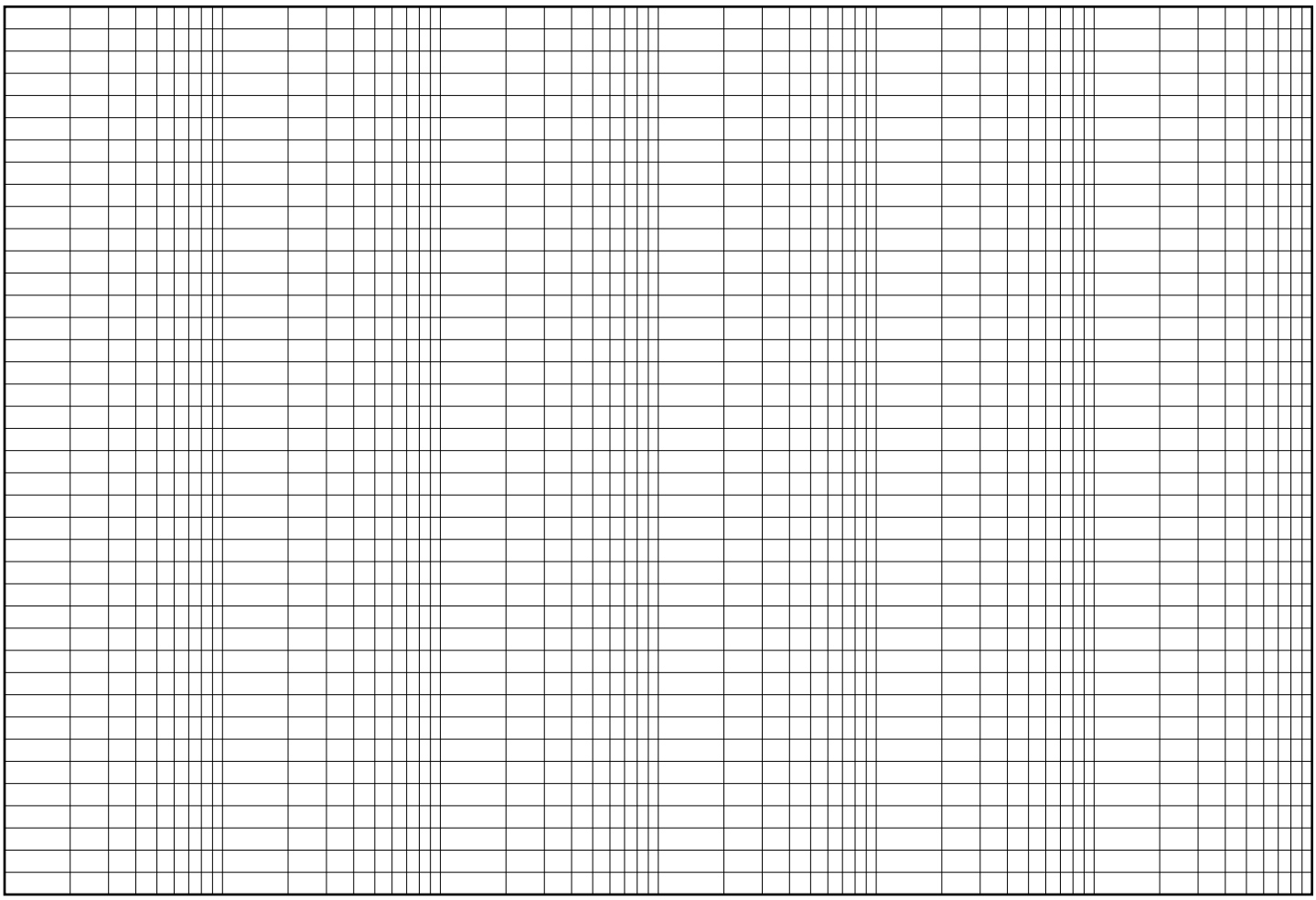

Pulsazione ω

Carta semilogaritmica a 9 decadi

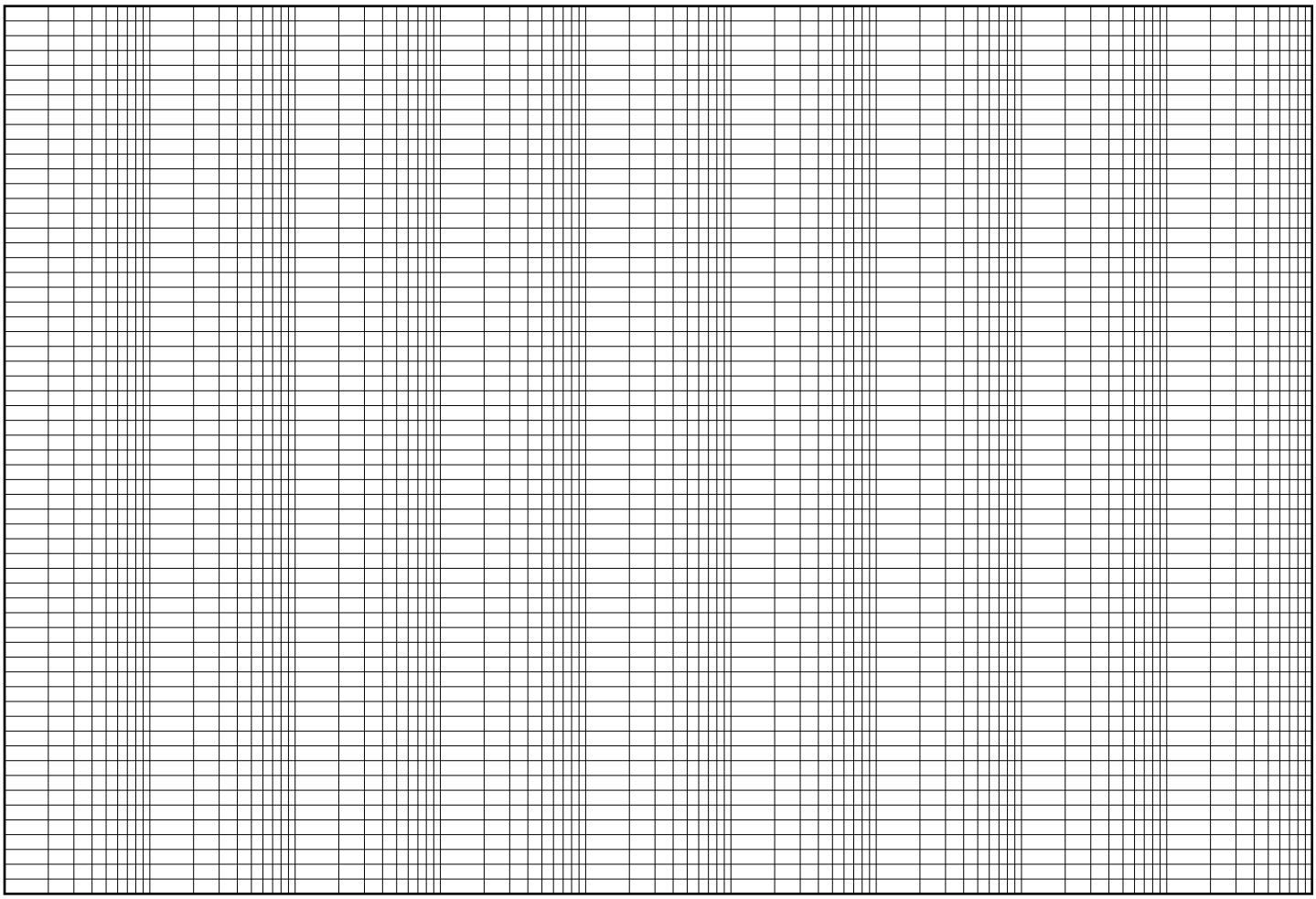

Pulsazione ω

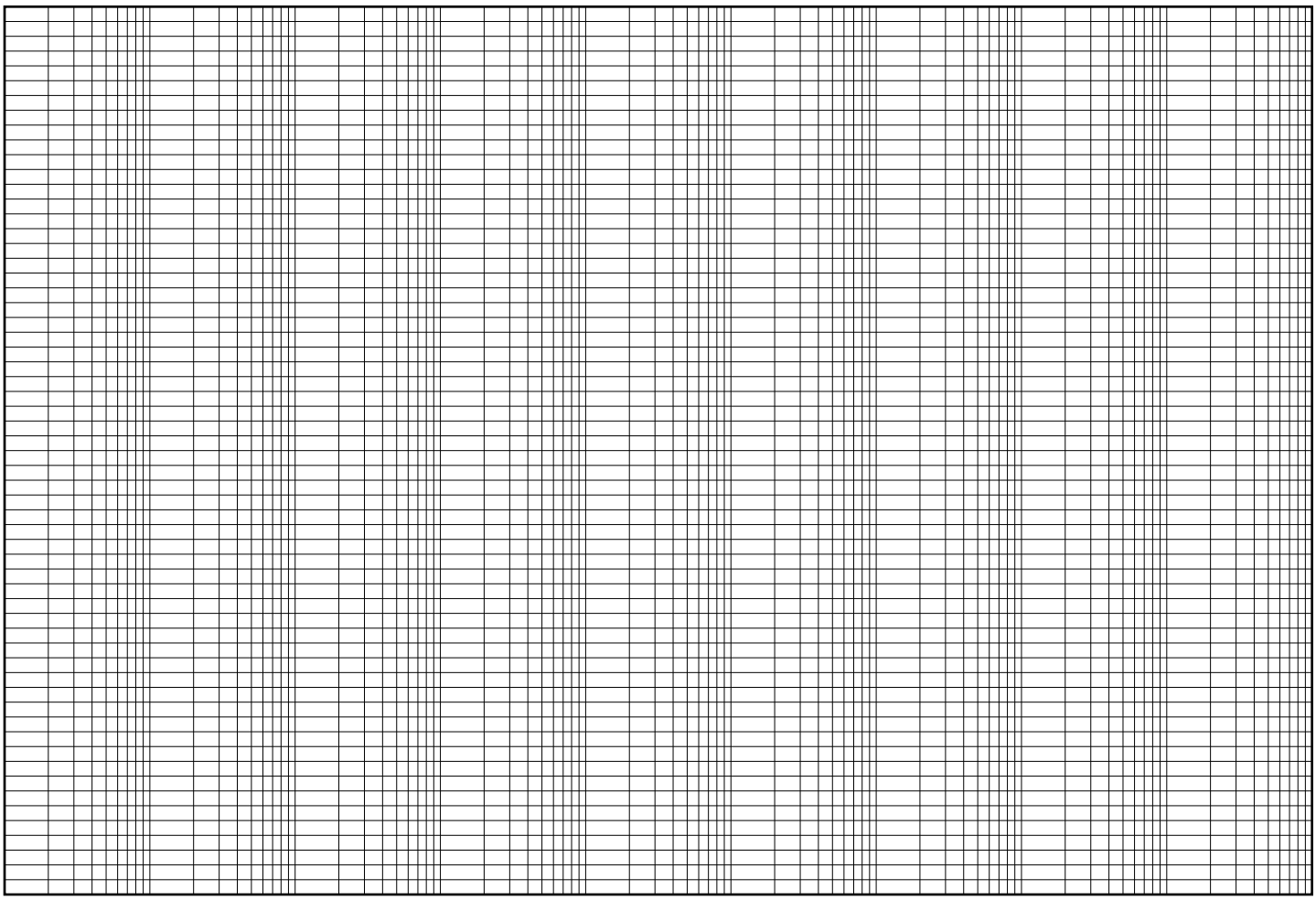

Pulsazione ω

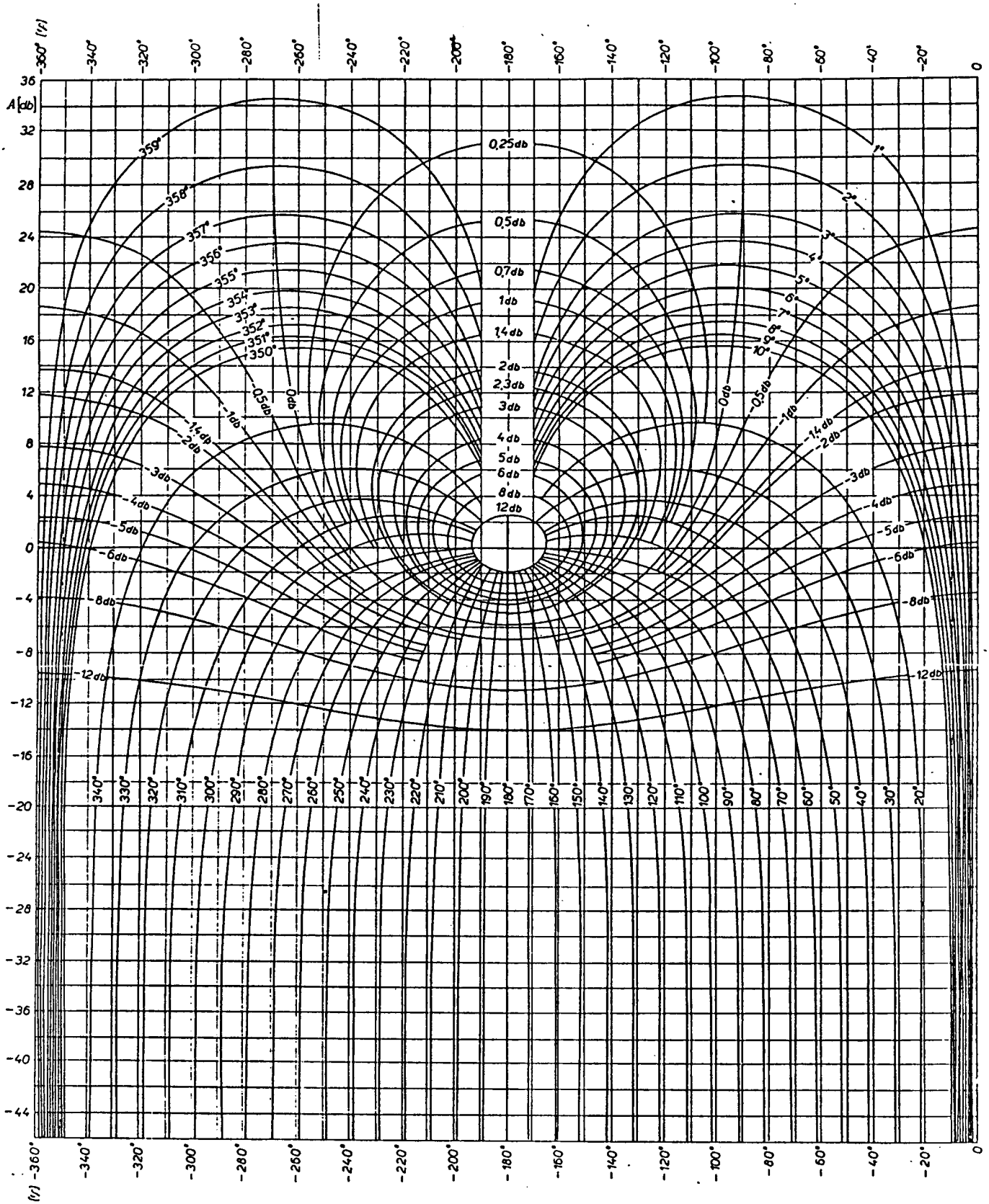

Carta di Nichols

Tema n. 3

Si deve progettare un ponte radio monodirezionale per stabilire un collegamento tra due punti fissi e trasmettere un flusso di informazione digitale.

Sono dati i seguenti vincoli del sistema:

- Banda a disposizione: opzione da 5.110 GHz a 5.190 GHz
- Traffico netto totale da trasportare: 20 flussi digitali a 10 Mbit/s. Per ciascun flusso si assume che la generazione del traffico sia temporalmente continua, cioè a bit rate constante nel tempo
- Si hanno a disposizione due antenne paraboliche con diametro d=30 cm.
- L'antenna di ricezione può essere considerata come un dispositivo che, oltre al segnale utile, ha una temperatura equivalente di sorgente pari a 210 K.
- Immediatamente in cascata all'antenna di ricezione è posto un amplificatore, adattato (in impedenza e in potenza) e all'equilibrio termico, alla temperatura di 290 K, con una cifra di rumore di 15 dB e un guadagno di potenza pari a 25 dB.
  Si consideri l'amplificatore piatto in frequenza su tutta la banda del segnale.
- L'amplificatore è poi seguito dagli apparati di ricezione digitale.
- Il sistema utilizza un codice a correzione di errore con un overhead del 15% che permette di avere un BER target di 10^{-4}
- Il sistema deve prevedere un margine di funzionamento di almeno 3 dB
- Si trascuri ogni altro tipo di effetto propagativo.

Si richiede di progettare il sistema di trasmissione, ed in particolare:

- Proporre un metodo di multiplazione (a scelta tra FDM e TDM) e di modulazione (a scelta completamente libera, ad esempio PSK, QAM, PAM, ecc) adatto a soddisfare le specifiche in termini di traffico totale da trasportare e di banda occupata
- Specificare conseguentemente nel dettaglio il "piano delle frequenze" risultante, cioè si disegni in maniera qualitativa lo spettro del segnale complessivo trasmesso, quotandolo opportunamente sull'asse delle frequenze
- Determinare la massima distanza raggiungibile in funzione del livello di potenza trasmessa al fine di soddisfare tutte le specifiche.
- Determinare eventualmente tutti gli altri parametri che risultino "liberi", cioè non specificati nel testo, proponendo scelte ragionevoli e motivate che dimostrino la capacità del candidato di conoscere gli ordini di grandezza tipici dei parametri in gioco.

Tema n. 4

Il candidato progetti un sistema di acquisizione dati per il monitoraggio della temperatura interna di un frigorifero. Il sistema progettato deve misurare una volta ogni ora la temperatura, ed immagazzinarla in una memoria non volatile.

Il sistema deve inoltre possedere una interfaccia di comunicazione seriale, per trasmettere i dati raccolti ad un PC.

Le specifiche di progetto sono le seguenti:

- Capacità di memorizzazione: 6 mesi di acquisizione
- Autonomia della batteria: 6 mesi
- Interfaccia seriale RS232
- Precisione: ± 2 gradi centigradi
- Range di temperatura: 0 - 30 gradi centigradi

Al termine del progetto, il candidato descriva le specifiche dettagliate del sistema ottenuto (precisione, autonomia, ecc.).

Materiale (in consultazione, da richiedere alla Commissione):

- Datasheet NTC
- Datasheet LM35
- Datasheet microcontrollore

NTC Thermistors, 2-Point Mini Chip Sensor, Flexible Leads

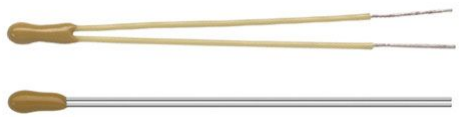

QUICK REFERENCE DATA		
PARAMETER	VALUE	UNIT
Resistance value at 25 °C	3K to 10K	Ω
Tolerance on R_{25}-value	± 2.18	%
$B_{25/85}$-value	3977	K
Tolerance on $B_{25/85}$-value	± 0.75	%
Operating temperature range at zero dissipation	- 40 to + 125	°C
Accuracy for T measured between 0 °C and 50 °C	± 0.5	°C
Maximum power dissipation at 55 °C	100	mW
Minimum dielectric withstanding voltage (RMS) between leads and coating	500	V
Climatic category (LCT/UCT/days)	40/125/56	
Weight	≈ 0.2	g

FEATURES

- Accuracy of 0.5 °C between 0 °C and 50 °C
- Small diameter
- High stability over a long life
- Long and flexible leads for special mounting or assembly requirements
- AEC-Q200 qualified
- Compliant to RoHS Directive 2002/95/EC and in accordance to WEEE 2002/96/EC

AUTOMOTIVE GRADE

Pb

e3

RoHS COMPLIANT

APPLICATIONS

- Temperature measurement, sensing and control in automotive, industrial and consumer electronic equipment

DESCRIPTION

These negative temperature ceofficient thermistors consist of a mini-chip soldered between two EFTE insulated (LE300) or non-insulated (LE201) nickel leads and coated with a solid ochre epoxy lacquer.

PACKAGING

The thermistors are packed in cardboard boxes; the smallest packing quantity is 1000 units.

MARKING

The body is colored with ochre lacquer and not marked.

MOUNTING

By soldering in any position.

ELECTRICAL DATA AND ORDERING INFORMATION			
R_{25}-VALUE (kΩ)	$B_{25/85}$-VALUE (K)	SAP MATERIAL AND ORDERING NUMBER NTCLE201E3...	OLD 12NC CODE 2381 645....
3	3977	302SB	10302
5	3977	502SB	10502
10	3977	103SB	10103
R_{25}-VALUE (kΩ)	$B_{25/85}$-VALUE (K)	SAP MATERIAL AND ORDERING NUMBER NTCLE300E3...	OLD 12NC CODE 2381 645....
3	3977	302SB	20302
5	3977	502SB	20502
10	3977	103SB	20103

DIMENSIONS in millimeters

Component outline for NTCLE201E3...

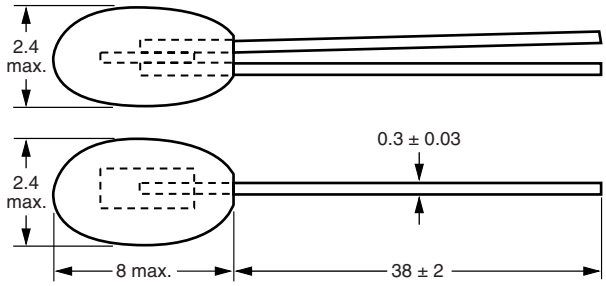

Component outline for NTCLE300E3...

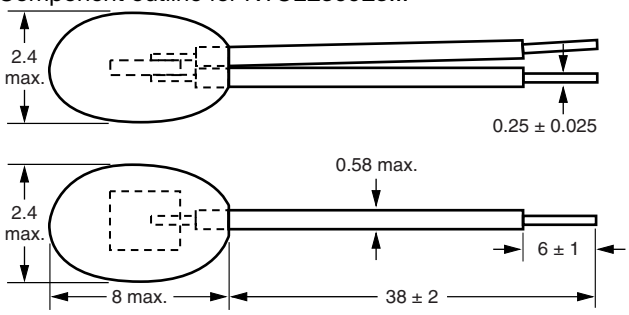

DERATING

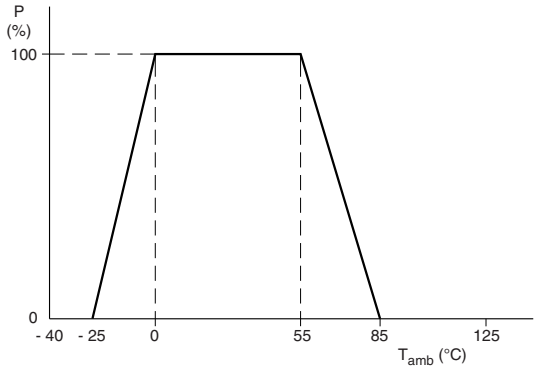

Power derating curve

Note

- Zero power is considered as measuring power max. 1 % of max. power

RESISTANCE VALUES AT INTERMEDIATE TEMPERATURES						
T_{OPER} (°C)	R_T/R_{25}	ΔT (K)	TCR (%/K)	R_{25}-VALUE (kΩ)		
				NTCLE201E3...SB OR NTCLE300E3...SB		
				302	502	103
- 40	33.21	0.68	6.57	99.63	166.1	332.1
- 35	23.99	0.66	6.36	71.97	120.0	239.9
- 30	17.52	0.64	6.15	52.56	87.60	175.2
- 25	12.93	0.62	5.95	38.79	64.65	129.3
- 20	9.636	0.59	5.76	28.91	48.18	96.36
- 15	7.250	0.57	5.58	21.75	36.25	72.50
- 10	5.505	0.55	5.40	16.51	27.52	55.05
- 5	4.216	0.52	5.24	12.65	21.08	42.16
0	3.255	0.50	5.08	9.766	16.28	32.56
5	2.534	0.50	4.92	7.602	12.67	25.34
10	1.987	0.50	4.78	5.962	9.936	19.87
15	1.570	0.50	4.64	4.710	7.849	15.70
20	1.249	0.50	4.50	3.746	6.244	12.49
25	1.000	0.50	4.37	3.000	5.000	10.00
30	0.8059	0.50	4.25	2.418	4.030	8.059
35	0.6535	0.50	4.13	1.960	3.267	6.535
40	0.5330	0.50	4.02	1.599	2.665	5.330
45	0.4372	0.50	3.91	1.312	2.186	4.372
50	0.3605	0.50	3.80	1.082	1.803	3.606
55	0.2989	0.55	3.70	0.8966	1.494	2.989
60	0.2490	0.61	3.60	0.7470	1.245	2.490
65	0.2084	0.66	3.51	0.6253	1.042	2.084
70	0.1753	0.72	3.42	0.5259	0.8765	1.753
75	0.1481	0.77	3.33	0.4443	0.7405	1.481
80	0.1256	0.83	3.25	0.3769	0.6282	1.256
85	0.1070	0.89	3.16	0.3211	0.5352	1.070
90	0.09154	0.95	3.09	0.2746	0.4577	0.9154
95	0.07860	1.02	3.01	0.2358	0.3930	0.7860
100	0.06773	1.08	2.94	0.2032	0.3387	0.6773
105	0.05858	1.14	2.87	0.1757	0.2929	0.5858
110	0.05083	1.21	2.80	0.1525	0.2542	0.5083
115	0.04426	1.27	2.73	0.1328	0.2213	0.4426
120	0.03866	1.34	2.67	0.1160	0.1933	0.3866
125	0.03387	1.41	2.61	0.1016	0.1694	0.3387

Disclaimer

ALL PRODUCT, PRODUCT SPECIFICATIONS AND DATA ARE SUBJECT TO CHANGE WITHOUT NOTICE TO IMPROVE RELIABILITY, FUNCTION OR DESIGN OR OTHERWISE.

Vishay Intertechnology, Inc., its affiliates, agents, and employees, and all persons acting on its or their behalf (collectively, "Vishay"), disclaim any and all liability for any errors, inaccuracies or incompleteness contained in any datasheet or in any other disclosure relating to any product.

Vishay makes no warranty, representation or guarantee regarding the suitability of the products for any particular purpose or the continuing production of any product. To the maximum extent permitted by applicable law, Vishay disclaims (i) any and all liability arising out of the application or use of any product, (ii) any and all liability, including without limitation special, consequential or incidental damages, and (iii) any and all implied warranties, including warranties of fitness for particular purpose, non-infringement and merchantability.

Statements regarding the suitability of products for certain types of applications are based on Vishay's knowledge of typical requirements that are often placed on Vishay products in generic applications. Such statements are not binding statements about the suitability of products for a particular application. It is the customer's responsibility to validate that a particular product with the properties described in the product specification is suitable for use in a particular application. Parameters provided in datasheets and/or specifications may vary in different applications and performance may vary over time. All operating parameters, including typical parameters, must be validated for each customer application by the customer's technical experts. Product specifications do not expand or otherwise modify Vishay's terms and conditions of purchase, including but not limited to the warranty expressed therein.

Except as expressly indicated in writing, Vishay products are not designed for use in medical, life-saving, or life-sustaining applications or for any other application in which the failure of the Vishay product could result in personal injury or death. Customers using or selling Vishay products not expressly indicated for use in such applications do so at their own risk. Please contact authorized Vishay personnel to obtain written terms and conditions regarding products designed for such applications.

No license, express or implied, by estoppel or otherwise, to any intellectual property rights is granted by this document or by any conduct of Vishay. Product names and markings noted herein may be trademarks of their respective owners.

Material Category Policy

Vishay Intertechnology, Inc. hereby certifies that all its products that are identified as RoHS-Compliant fulfill the definitions and restrictions defined under Directive 2011/65/EU of The European Parliament and of the Council of June 8, 2011 on the restriction of the use of certain hazardous substances in electrical and electronic equipment (EEE) - recast, unless otherwise specified as non-compliant.

Please note that some Vishay documentation may still make reference to RoHS Directive 2002/95/EC. We confirm that all the products identified as being compliant to Directive 2002/95/EC conform to Directive 2011/65/EU.

Vishay Intertechnology, Inc. hereby certifies that all its products that are identified as Halogen-Free follow Halogen-Free requirements as per JEDEC JS709A standards. Please note that some Vishay documentation may still make reference to the IEC 61249-2-21 definition. We confirm that all the products identified as being compliant to IEC 61249-2-21 conform to JEDEC JS709A standards.

LM35 Precision Centigrade Temperature Sensors

1 Features

- Calibrated Directly in Celsius (Centigrade)
- Linear + 10-mV/°C Scale Factor
- 0.5°C Ensured Accuracy (at 25°C)
- Rated for Full −55°C to 150°C Range
- Suitable for Remote Applications
- Low-Cost Due to Wafer-Level Trimming
- Operates From 4 V to 30 V
- Less Than 60-µA Current Drain
- Low Self-Heating, 0.08°C in Still Air
- Non-Linearity Only ±¼°C Typical
- Low-Impedance Output, 0.1 Ω for 1-mA Load

2 Applications

- Power Supplies
- Battery Management
- HVAC
- Appliances

3 Description

The LM35 series are precision integrated-circuit temperature devices with an output voltage linearly-proportional to the Centigrade temperature. The LM35 device has an advantage over linear temperature sensors calibrated in Kelvin, as the user is not required to subtract a large constant voltage from the output to obtain convenient Centigrade scaling. The LM35 device does not require any external calibration or trimming to provide typical accuracies of ±¼°C at room temperature and ±¾°C over a full −55°C to 150°C temperature range. Lower cost is assured by trimming and calibration at the wafer level. The low-output impedance, linear output, and precise inherent calibration of the LM35 device makes interfacing to readout or control circuitry especially easy. The device is used with single power supplies, or with plus and minus supplies. As the LM35 device draws only 60 µA from the supply, it has very low self-heating of less than 0.1°C in still air. The LM35 device is rated to operate over a −55°C to 150°C temperature range, while the LM35C device is rated for a −40°C to 110°C range (−10° with improved accuracy). The LM35-series devices are available packaged in hermetic TO transistor packages, while the LM35C, LM35CA, and LM35D devices are available in the plastic TO-92 transistor package. The LM35D device is available in an 8-lead surface-mount small-outline package and a plastic TO-220 package.

Device Information(1)

PART NUMBER	PACKAGE	BODY SIZE (NOM)
LM35	TO-CAN (3)	4.699 mm × 4.699 mm
	TO-92 (3)	4.30 mm × 4.30 mm
	SOIC (8)	4.90 mm × 3.91 mm
	TO-220 (3)	14.986 mm × 10.16 mm

(1) For all available packages, see the orderable addendum at the end of the datasheet.

Basic Centigrade Temperature Sensor (2°C to 150°C)

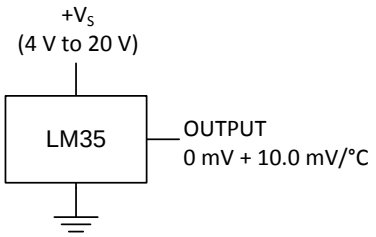

Full-Range Centigrade Temperature Sensor

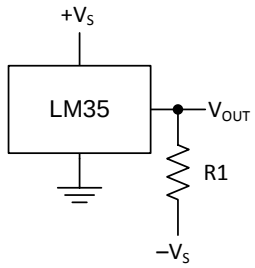

Choose $R_1 = -V_S / 50\ \mu A$
V_{OUT} = 1500 mV at 150°C
V_{OUT} = 250 mV at 25°C
V_{OUT} = –550 mV at –55°C

Table of Contents

4 Revision History

Changes from Revision G (August 2016) to Revision H — **Page**

- Changed NDV Package (TO-CAN) pinout from bottom view back to top view; added textnote to pinout ... 3
- Added pin numbers to the TO-CAN (TO46) pinout ... 3

Changes from Revision F (January 2016) to Revision G — **Page**

- Equation 1, changed From: 10 mV/°F To: 10mv/°C ... 13
- *Power Supply Recommendations*, changed From: "4-V to 5.5-V power supply" To: "4-V to 30-V power supply: ... 19

Changes from Revision E (January 2015) to Revision F — **Page**

- Changed NDV Package (TO-CAN) pinout from Top View to Bottom View ... 3

Changes from Revision D (October 2013) to Revision E — **Page**

- Added *Pin Configuration and Functions* section, *ESD Ratings* table, *Feature Description* section, *Device Functional Modes*, *Application and Implementation* section, *Power Supply Recommendations* section, *Layout* section, *Device and Documentation Support* section, and *Mechanical, Packaging, and Orderable Information* section ... 1

Changes from Revision C (July 2013) to Revision D — **Page**

- Changed *W* to *Ω* ... 1
- Changed *W* to *Ω* in *Abs Max* tablenote. ... 4

5 Pin Configuration and Functions

NDV Package
3-Pin TO-CAN
(Top View)

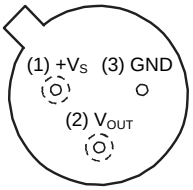

Case is connected to negative pin (GND)

Refer the second NDV0003H page for reference

LP Package
3-Pin TO-92
(Bottom View)

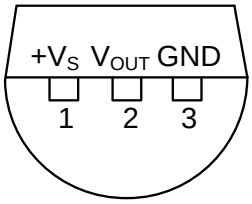

D Package
8-PIN SOIC
(Top View)

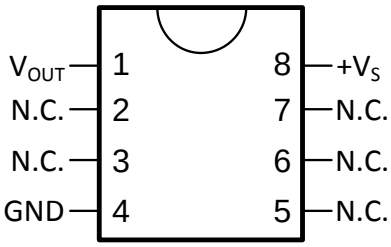

N.C. = No connection

NEB Package
3-Pin TO-220
(Top View)

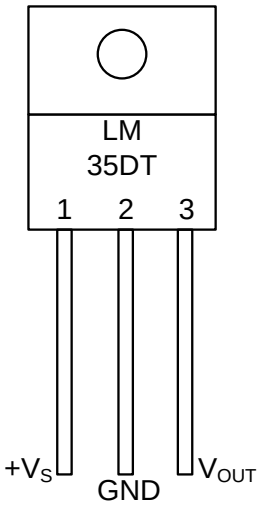

Tab is connected to the negative pin (GND).

NOTE: The LM35DT pinout is different than the discontinued LM35DP

Pin Functions

PIN					TYPE	DESCRIPTION
NAME	TO46	TO92	TO220	SO8		
V_{OUT}	2	2	3	1	O	Temperature Sensor Analog Output
N.C.	—	—	—	2	—	No Connection
	—	—	—	3		
GND	3	3	2	4	GROUND	Device ground pin, connect to power supply negative terminal
N.C.	—	—	—	5	—	No Connection
	—	—	—	6		
	—	—	—	7		
$+V_S$	1	1	1	8	POWER	Positive power supply pin

6 Specifications

6.1 Absolute Maximum Ratings

over operating free-air temperature range (unless otherwise noted)[1][2]

		MIN	MAX	UNIT
Supply voltage		–0.2	35	V
Output voltage		–1	6	V
Output current			10	mA
Maximum Junction Temperature, $T_J$max			150	°C
Storage Temperature, T_{stg}	TO-CAN, TO-92 Package	–60	150	°C
	TO-220, SOIC Package	–65	150	

(1) If Military/Aerospace specified devices are required, please contact the Texas Instruments Sales Office/ Distributors for availability and specifications.
(2) Absolute Maximum Ratings indicate limits beyond which damage to the device may occur. DC and AC electrical specifications do not apply when operating the device beyond its rated operating conditions.

6.2 ESD Ratings

		VALUE	UNIT
$V_{(ESD)}$ Electrostatic discharge	Human-body model (HBM), per ANSI/ESDA/JEDEC JS-001[1]	±2500	V

(1) JEDEC document JEP155 states that 500-V HBM allows safe manufacturing with a standard ESD control process.

6.3 Recommended Operating Conditions

over operating free-air temperature range (unless otherwise noted)

		MIN	MAX	UNIT
Specified operating temperature: T_{MIN} to T_{MAX}	LM35, LM35A	–55	150	°C
	LM35C, LM35CA	–40	110	
	LM35D	0	100	
Supply Voltage (+V_S)		4	30	V

6.4 Thermal Information

THERMAL METRIC[1][2]		LM35				UNIT
		NDV	LP	D	NEB	
		3 PINS		8 PINS	3 PINS	
$R_{\theta JA}$	Junction-to-ambient thermal resistance	400	180	220	90	°C/W
$R_{\theta JC(top)}$	Junction-to-case (top) thermal resistance	24	—	—	—	

(1) For more information about traditional and new thermal metrics, see the *IC Package Thermal Metrics* application report, SPRA953.
(2) For additional thermal resistance information, see *Typical Application*.

6.5 Electrical Characteristics: LM35A, LM35CA Limits

Unless otherwise noted, these specifications apply: −55°C ≤ T_J ≤ 150°C for the LM35 and LM35A; −40°C ≤ T_J ≤ 110°C for the LM35C and LM35CA; and 0°C ≤ T_J ≤ 100°C for the LM35D. V_S = 5 Vdc and I_{LOAD} = 50 μA, in the circuit of Full-Range Centigrade Temperature Sensor. These specifications also apply from 2°C to T_{MAX} in the circuit of Figure 14.

PARAMETER	TEST CONDITIONS	LM35A			LM35CA			UNIT
		TYP	TESTED LIMIT(1)	DESIGN LIMIT(2)	TYP	TESTED LIMIT(1)	DESIGN LIMIT(2)	
Accuracy(3)	T_A = 25°C	±0.2	±0.5		±0.2	±0.5		°C
	T_A = –10°C	±0.3			±0.3		±1	
	T_A = T_{MAX}	±0.4	±1		±0.4	±1		
	T_A = T_{MIN}	±0.4	±1		±0.4		±1.5	
Nonlinearity(4)	T_{MIN} ≤ T_A ≤ T_{MAX}, –40°C ≤ T_J ≤ 125°C	±0.18		±0.35	±0.15		±0.3	°C
Sensor gain (average slope)	T_{MIN} ≤ T_A ≤ T_{MAX}	10	9.9		10		9.9	mV/°C
	–40°C ≤ T_J ≤ 125°C	10	10.1		10		10.1	
Load regulation(5) 0 ≤ I_L ≤ 1 mA	T_A = 25°C	±0.4	±1		±0.4	±1		mV/mA
	T_{MIN} ≤ T_A ≤ T_{MAX}, –40°C ≤ T_J ≤ 125°C	±0.5		±3	±0.5		±3	
Line regulation(5)	T_A = 25°C	±0.01	±0.05		±0.01	±0.05		mV/V
	4 V ≤ V_S ≤ 30 V, –40°C ≤ T_J ≤ 125°C	±0.02		±0.1	±0.02		±0.1	
Quiescent current(6)	V_S = 5 V, 25°C	56	67		56	67		μA
	V_S = 5 V, –40°C ≤ T_J ≤ 125°C	105		131	91		114	
	V_S = 30 V, 25°C	56.2	68		56.2	68		
	V_S = 30 V, –40°C ≤ T_J ≤ 125°C	105.5		133	91.5		116	
Change of quiescent current(5)	4 V ≤ V_S ≤ 30 V, 25°C	0.2	1		0.2	1		μA
	4 V ≤ V_S ≤ 30 V, –40°C ≤ T_J ≤ 125°C	0.5		2	0.5		2	
Temperature coefficient of quiescent current	–40°C ≤ T_J ≤ 125°C	0.39		0.5	0.39		0.5	μA/°C
Minimum temperature for rate accuracy	In circuit of Figure 14, I_L = 0	1.5		2	1.5		2	°C
Long term stability	T_J = T_{MAX}, for 1000 hours	±0.08			±0.08			°C

(1) Tested Limits are ensured and 100% tested in production.
(2) Design Limits are ensured (but not 100% production tested) over the indicated temperature and supply voltage ranges. These limits are not used to calculate outgoing quality levels.
(3) Accuracy is defined as the error between the output voltage and 10 mv/°C times the case temperature of the device, at specified conditions of voltage, current, and temperature (expressed in °C).
(4) Non-linearity is defined as the deviation of the output-voltage-versus-temperature curve from the best-fit straight line, over the rated temperature range of the device.
(5) Regulation is measured at constant junction temperature, using pulse testing with a low duty cycle. Changes in output due to heating effects can be computed by multiplying the internal dissipation by the thermal resistance.
(6) Quiescent current is defined in the circuit of Figure 14.

6.6 Electrical Characteristics: LM35A, LM35CA

Unless otherwise noted, these specifications apply: −55°C ≤ T_J ≤ 150°C for the LM35 and LM35A; −40°C ≤ T_J ≤ 110°C for the LM35C and LM35CA; and 0°C ≤ T_J ≤ 100°C for the LM35D. V_S = 5 Vdc and I_{LOAD} = 50 μA, in the circuit of Full-Range Centigrade Temperature Sensor. These specifications also apply from 2°C to T_{MAX} in the circuit of Figure 14.

PARAMETER	TEST CONDITIONS		LM35A			LM35CA			UNIT
			MIN	TYP	MAX	TYP	TYP	MAX	
Accuracy(1)	T_A = 25°C			±0.2			±0.2		°C
		Tested Limit(2)			±0.5			±0.5	
		Design Limit(3)							
	T_A = –10°C			±0.3			±0.3		
		Tested Limit(2)							
		Design Limit(3)						±1	
	T_A = T_{MAX}			±0.4			±0.4		
		Tested Limit(2)			±1			±1	
		Design Limit(3)							
	T_A = T_{MIN}			±0.4			±0.4		
		Tested Limit(2)			±1				
		Design Limit(3)						±1.5	
Nonlinearity(4)	T_{MIN} ≤ T_A ≤ T_{MAX}, –40°C ≤ T_J ≤ 125°C			±0.18			±0.15		°C
		Tested Limit(2)							
		Design Limit(3)			±0.35			±0.3	
Sensor gain (average slope)	T_{MIN} ≤ T_A ≤ T_{MAX}			10			10		mV/°C
		Tested Limit(2)			9.9				
		Design Limit(3)						9.9	
	–40°C ≤ T_J ≤ 125°C			10			10		
		Tested Limit(2)			10.1				
		Design Limit(3)						10.1	
Load regulation(5) 0 ≤ I_L ≤ 1 mA	T_A = 25°C			±0.4			±0.4		mV/mA
		Tested Limit(2)			±1			±1	
		Design Limit(3)							
	T_{MIN} ≤ T_A ≤ T_{MAX}, –40°C ≤ T_J ≤ 125°C			±0.5			±0.5		
		Tested Limit(2)							
		Design Limit(3)			±3			±3	
Line regulation(5)	T_A = 25°C			±0.01			±0.01		mV/V
		Tested Limit(2)			±0.05			±0.05	
		Design Limit(3)							
	4 V ≤ V_S ≤ 30 V, –40°C ≤ T_J ≤ 125°C			±0.02			±0.02		
		Tested Limit(2)							
		Design Limit(3)			±0.1			±0.1	

(1) Accuracy is defined as the error between the output voltage and 10 mv/°C times the case temperature of the device, at specified conditions of voltage, current, and temperature (expressed in °C).
(2) Tested Limits are ensured and 100% tested in production.
(3) Design Limits are ensured (but not 100% production tested) over the indicated temperature and supply voltage ranges. These limits are not used to calculate outgoing quality levels.
(4) Non-linearity is defined as the deviation of the output-voltage-versus-temperature curve from the best-fit straight line, over the rated temperature range of the device.
(5) Regulation is measured at constant junction temperature, using pulse testing with a low duty cycle. Changes in output due to heating effects can be computed by multiplying the internal dissipation by the thermal resistance.

Electrical Characteristics: LM35A, LM35CA (continued)

Unless otherwise noted, these specifications apply: −55°C ≤ T_J ≤ 150°C for the LM35 and LM35A; −40°C ≤ T_J ≤ 110°C for the LM35C and LM35CA; and 0°C ≤ T_J ≤ 100°C for the LM35D. V_S = 5 Vdc and I_{LOAD} = 50 μA, in the circuit of Full-Range Centigrade Temperature Sensor. These specifications also apply from 2°C to T_{MAX} in the circuit of Figure 14.

PARAMETER	TEST CONDITIONS		LM35A			LM35CA			UNIT
			MIN	TYP	MAX	TYP	TYP	MAX	
Quiescent current(6)	V_S = 5 V, 25°C			56			56		μA
		Tested Limit(2)			67			67	
		Design Limit(3)							
	V_S = 5 V, –40°C ≤ T_J ≤ 125°C			105			91		
		Tested Limit(2)							
		Design Limit(3)			131			114	
	V_S = 30 V, 25°C			56.2			56.2		
		Tested Limit(2)			68			68	
		Design Limit(3)							
	V_S = 30 V, –40°C ≤ T_J ≤ 125°C			105.5			91.5		
		Tested Limit(2)							
		Design Limit(3)			133			116	
Change of quiescent current(5)	4 V ≤ V_S ≤ 30 V, 25°C			0.2			0.2		μA
		Tested Limit(2)			1			1	
		Design Limit(3)							
	4 V ≤ V_S ≤ 30 V, –40°C ≤ T_J ≤ 125°C			0.5			0.5		
		Tested Limit(2)							
		Design Limit(3)			2			2	
Temperature coefficient of quiescent current	–40°C ≤ T_J ≤ 125°C			0.39			0.39		μA/°C
		Tested Limit(2)							
		Design Limit(3)			0.5			0.5	
Minimum temperature for rate accuracy	In circuit of Figure 14, I_L = 0			1.5			1.5		°C
		Tested Limit(2)							
		Design Limit(3)			2			2	
Long term stability	T_J = T_{MAX}, for 1000 hours			±0.08			±0.08		°C

(6) Quiescent current is defined in the circuit of Figure 14.

6.7 Electrical Characteristics: LM35, LM35C, LM35D Limits

Unless otherwise noted, these specifications apply: −55°C ≤ T_J ≤ 150°C for the LM35 and LM35A; −40°C ≤ T_J ≤ 110°C for the LM35C and LM35CA; and 0°C ≤ T_J ≤ 100°C for the LM35D. V_S = 5 Vdc and I_{LOAD} = 50 μA, in the circuit of Full-Range Centigrade Temperature Sensor. These specifications also apply from 2°C to T_{MAX} in the circuit of Figure 14.

PARAMETER	TEST CONDITIONS	LM35			LM35C, LM35D			UNIT
		TYP	TESTED LIMIT(1)	DESIGN LIMIT(2)	TYP	TESTED LIMIT(1)	DESIGN LIMIT(2)	
Accuracy, LM35, LM35C(3)	T_A = 25°C	±0.4	±1		±0.4	±1		°C
	T_A = –10°C	±0.5			±0.5		±1.5	
	T_A = T_{MAX}	±0.8	±1.5		±0.8		±1.5	
	T_A = T_{MIN}	±0.8		±1.5	±0.8		±2	
Accuracy, LM35D(3)	T_A = 25°C				±0.6	±1.5		°C
	T_A = T_{MAX}				±0.9		±2	
	T_A = T_{MIN}				±0.9		±2	
Nonlinearity(4)	T_{MIN} ≤ T_A ≤ T_{MAX}, –40°C ≤ T_J ≤ 125°C	±0.3		±0.5	±0.2		±0.5	°C
Sensor gain (average slope)	T_{MIN} ≤ T_A ≤ T_{MAX}, –40°C ≤ T_J ≤ 125°C	10	9.8		10		9.8	mV/°C
		10	10.2		10		10.2	
Load regulation(5) 0 ≤ I_L ≤ 1 mA	T_A = 25°C	±0.4	±2		±0.4	±2		mV/mA
	T_{MIN} ≤ T_A ≤ T_{MAX}, –40°C ≤ T_J ≤ 125°C	±0.5		±5	±0.5		±5	
Line regulation(5)	T_A = 25°C	±0.01	±0.1		±0.01	±0.1		mV/V
	4 V ≤ V_S ≤ 30 V, –40°C ≤ T_J ≤ 125°C	±0.02		±0.2	±0.02		±0.2	
Quiescent current(6)	V_S = 5 V, 25°C	56	80		56	80		μA
	V_S = 5 V, –40°C ≤ T_J ≤ 125°C	105		158	91		138	
	V_S = 30 V, 25°C	56.2	82		56.2	82		
	V_S = 30 V, –40°C ≤ T_J ≤ 125°C	105.5		161	91.5		141	
Change of quiescent current(5)	4 V ≤ V_S ≤ 30 V, 25°C	0.2	2		0.2	2		μA
	4 V ≤ V_S ≤ 30 V, –40°C ≤ T_J ≤ 125°C	0.5		3	0.5		**3**	
Temperature coefficient of quiescent current	–40°C ≤ T_J ≤ 125°C	0.39		0.7	0.39		0.7	μA/°C
Minimum temperature for rate accuracy	In circuit of Figure 14, I_L = 0	1.5		2	1.5		2	°C
Long term stability	T_J = T_{MAX}, for 1000 hours	±0.08			±0.08			°C

(1) Tested Limits are ensured and 100% tested in production.
(2) Design Limits are ensured (but not 100% production tested) over the indicated temperature and supply voltage ranges. These limits are not used to calculate outgoing quality levels.
(3) Accuracy is defined as the error between the output voltage and 10 mv/°C times the case temperature of the device, at specified conditions of voltage, current, and temperature (expressed in °C).
(4) Non-linearity is defined as the deviation of the output-voltage-versus-temperature curve from the best-fit straight line, over the rated temperature range of the device.
(5) Regulation is measured at constant junction temperature, using pulse testing with a low duty cycle. Changes in output due to heating effects can be computed by multiplying the internal dissipation by the thermal resistance.
(6) Quiescent current is defined in the circuit of Figure 14.

6.8 Electrical Characteristics: LM35, LM35C, LM35D

Unless otherwise noted, these specifications apply: −55°C ≤ T_J ≤ 150°C for the LM35 and LM35A; −40°C ≤ T_J ≤ 110°C for the LM35C and LM35CA; and 0°C ≤ T_J ≤ 100°C for the LM35D. V_S = 5 Vdc and I_{LOAD} = 50 μA, in the circuit of Full-Range Centigrade Temperature Sensor. These specifications also apply from 2°C to T_{MAX} in the circuit of Figure 14.

PARAMETER	TEST CONDITIONS		LM35			LM35C, LM35D			UNIT
			MIN	TYP	MAX	MIN	TYP	MAX	
Accuracy, LM35, LM35C(1)	T_A = 25°C			±0.4			±0.4		°C
		Tested Limit(2)			±1			±1	
		Design Limit(3)							
	T_A = –10°C			±0.5			±0.5		
		Tested Limit(2)							
		Design Limit(3)						±1.5	
	T_A = T_{MAX}			±0.8			±0.8		
		Tested Limit(2)			±1.5				
		Design Limit(3)						±1.5	
	T_A = T_{MIN}			±0.8			±0.8		
		Tested Limit(2)							
		Design Limit(3)			±1.5			±2	
Accuracy, LM35D(1)	T_A = 25°C						±0.6		°C
		Tested Limit(2)						±1.5	
		Design Limit(3)							
	T_A = T_{MAX}						±0.9		
		Tested Limit(2)							
		Design Limit(3)						±2	
	T_A = T_{MIN}						±0.9		
		Tested Limit(2)							
		Design Limit(3)						±2	
Nonlinearity(4)	T_{MIN} ≤ T_A ≤ T_{MAX}, –40°C ≤ T_J ≤ 125°C			±0.3			±0.2		°C
		Tested Limit(2)							
		Design Limit(3)			±0.5			±0.5	
Sensor gain (average slope)	T_{MIN} ≤ T_A ≤ T_{MAX}, –40°C ≤ T_J ≤ 125°C			10			10		mV/°C
		Tested Limit(2)			9.8				
		Design Limit(3)						9.8	
				10			10		
		Tested Limit(2)			10.2				
		Design Limit(3)						10.2	
Load regulation(5) 0 ≤ I_L ≤ 1 mA	T_A = 25°C			±0.4			±0.4		mV/mA
		Tested Limit(2)			±2			±2	
		Design Limit(3)							
	T_{MIN} ≤ T_A ≤ T_{MAX}, –40°C ≤ T_J ≤ 125°C			±0.5			±0.5		
		Tested Limit(2)							
		Design Limit(3)			±5			±5	

(1) Accuracy is defined as the error between the output voltage and 10 mv/°C times the case temperature of the device, at specified conditions of voltage, current, and temperature (expressed in °C).
(2) Tested Limits are ensured and 100% tested in production.
(3) Design Limits are ensured (but not 100% production tested) over the indicated temperature and supply voltage ranges. These limits are not used to calculate outgoing quality levels.
(4) Non-linearity is defined as the deviation of the output-voltage-versus-temperature curve from the best-fit straight line, over the rated temperature range of the device.
(5) Regulation is measured at constant junction temperature, using pulse testing with a low duty cycle. Changes in output due to heating effects can be computed by multiplying the internal dissipation by the thermal resistance.

Electrical Characteristics: LM35, LM35C, LM35D (continued)

Unless otherwise noted, these specifications apply: −55°C ≤ T_J ≤ 150°C for the LM35 and LM35A; −40°C ≤ T_J ≤ 110°C for the LM35C and LM35CA; and 0°C ≤ T_J ≤ 100°C for the LM35D. V_S = 5 Vdc and I_{LOAD} = 50 μA, in the circuit of Full-Range Centigrade Temperature Sensor. These specifications also apply from 2°C to T_{MAX} in the circuit of Figure 14.

PARAMETER	TEST CONDITIONS		LM35			LM35C, LM35D			UNIT
			MIN	TYP	MAX	MIN	TYP	MAX	
Line regulation(5)	T_A = 25°C			±0.01			±0.01		mV/V
		Tested Limit(2)			±0.1				
		Design Limit(3)						±0.1	
	4 V ≤ V_S ≤ 30 V, –40°C ≤ T_J ≤ 125°C			±0.02			±0.02		
		Tested Limit(2)							
		Design Limit(3)			±0.2			±0.2	
Quiescent current(6)	V_S = 5 V, 25°C			56			56		μA
		Tested Limit(2)			80			80	
		Design Limit(3)							
	V_S = 5 V, –40°C ≤ T_J ≤ 125°C			105			91		
		Tested Limit(2)							
		Design Limit(3)			158			138	
	V_S = 30 V, 25°C			56.2			56.2		
		Tested Limit(2)			82			82	
		Design Limit(3)							
	V_S = 30 V, –40°C ≤ T_J ≤ 125°C			105.5			91.5		
		Tested Limit(2)							
		Design Limit(3)			161			141	
Change of quiescent current(5)	4 V ≤ V_S ≤ 30 V, 25°C			0.2			0.2		μA
		Tested Limit(2)						2	
		Design Limit(3)			2				
	4 V ≤ V_S ≤ 30 V, –40°C ≤ T_J ≤ 125°C			0.5			0.5		
		Tested Limit(2)							
		Design Limit(3)			3			3	
Temperature coefficient of quiescent current	–40°C ≤ T_J ≤ 125°C			0.39			0.39		μA/°C
		Tested Limit(2)							
		Design Limit(3)			0.7			0.7	
Minimum temperature for rate accuracy	In circuit of Figure 14, I_L = 0			1.5			1.5		°C
		Tested Limit(2)							
		Design Limit(3)			2			2	
Long term stability	T_J = T_{MAX}, for 1000 hours			±0.08			±0.08		°C

(6) Quiescent current is defined in the circuit of Figure 14.

6.9 Typical Characteristics

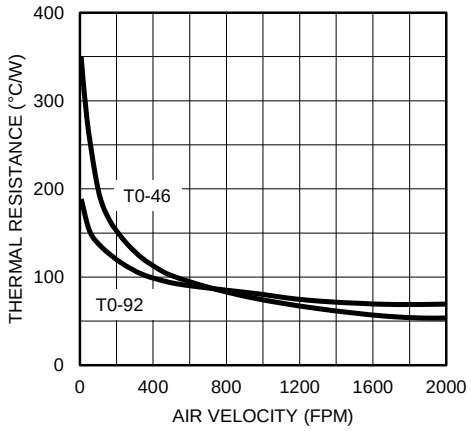

Figure 1. Thermal Resistance Junction To Air

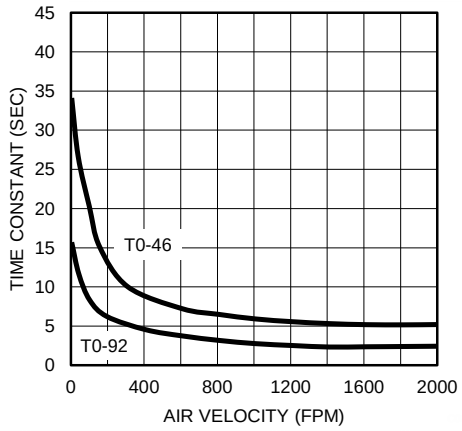

Figure 2. Thermal Time Constant

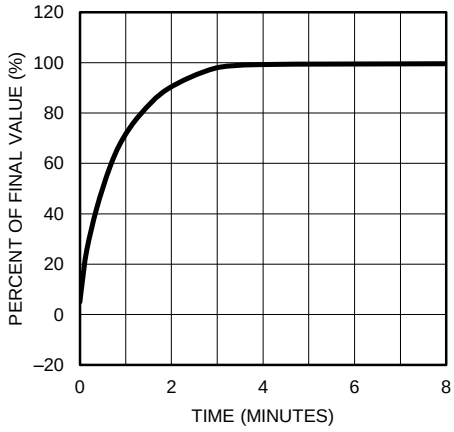

Figure 3. Thermal Response In Still Air

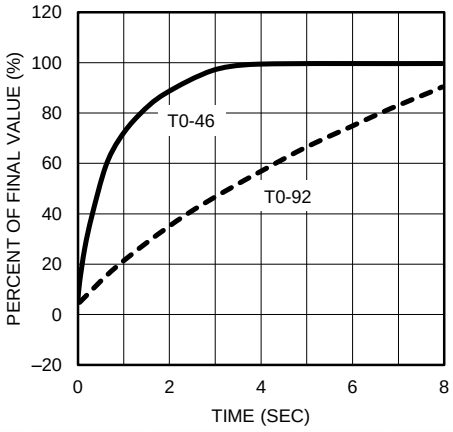

Figure 4. Thermal Response In Stirred Oil Bath

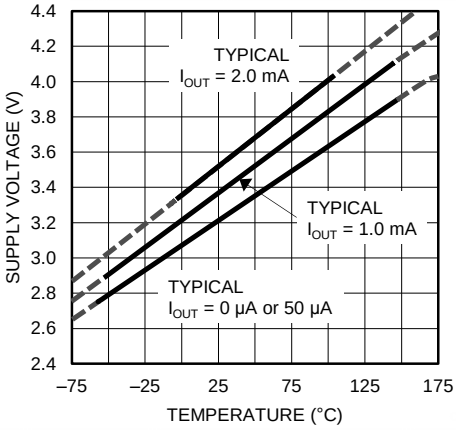

Figure 5. Minimum Supply Voltage vs Temperature

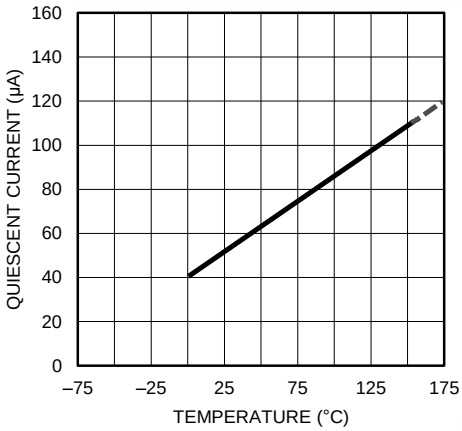

Figure 6. Quiescent Current vs Temperature (in Circuit of Figure 14)

Typical Characteristics (continued)

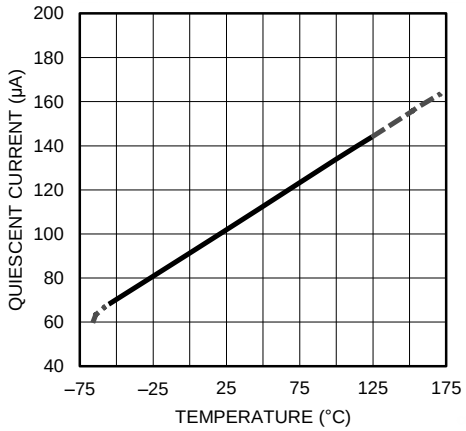

Figure 7. Quiescent Current vs Temperature (in Circuit of Full-Range Centigrade Temperature Sensor)

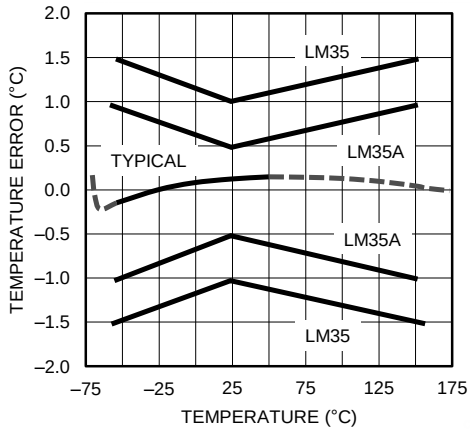

Figure 8. Accuracy vs Temperature (Ensured)

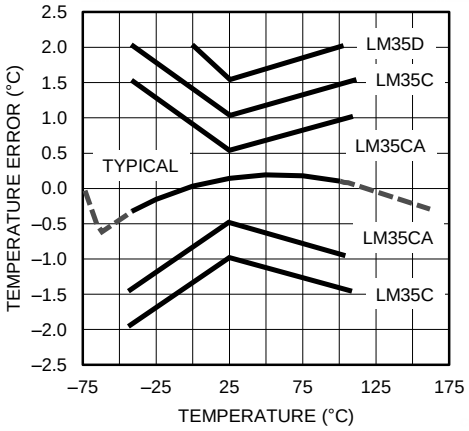

Figure 9. Accuracy vs Temperature (Ensured)

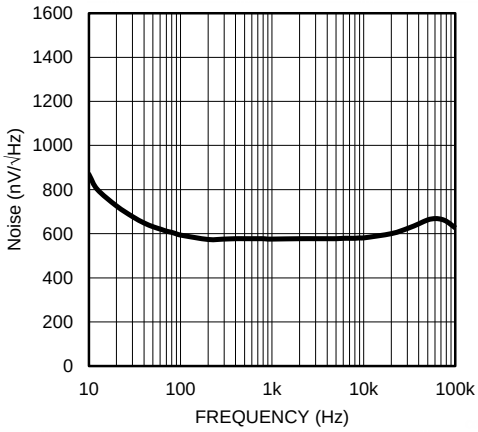

Figure 10. Noise Voltage

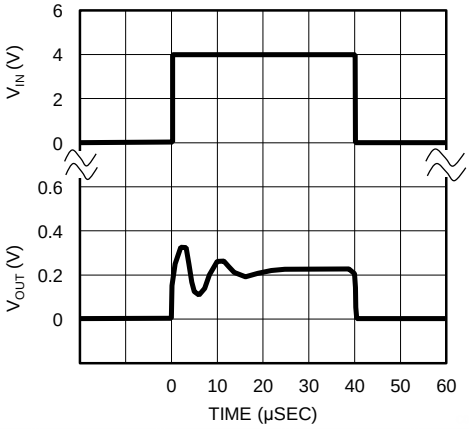

Figure 11. Start-Up Response

7 Detailed Description

7.1 Overview

The LM35-series devices are precision integrated-circuit temperature sensors, with an output voltage linearly proportional to the Centigrade temperature. The LM35 device has an advantage over linear temperature sensors calibrated in Kelvin, as the user is not required to subtract a large constant voltage from the output to obtain convenient Centigrade scaling. The LM35 device does not require any external calibration or trimming to provide typical accuracies of ± ¼ °C at room temperature and ± ¾ °C over a full −55°C to 150°C temperature range. Lower cost is assured by trimming and calibration at the wafer level. The low output impedance, linear output, and precise inherent calibration of the LM35 device makes interfacing to readout or control circuitry especially easy. The device is used with single power supplies, or with plus and minus supplies. As the LM35 device draws only 60 μA from the supply, it has very low self-heating of less than 0.1°C in still air. The LM35 device is rated to operate over a −55°C to 150°C temperature range, while the LM35C device is rated for a −40°C to 110°C range (−10° with improved accuracy). The temperature-sensing element is comprised of a delta-V BE architecture.

The temperature-sensing element is then buffered by an amplifier and provided to the VOUT pin. The amplifier has a simple class A output stage with typical 0.5-Ω output impedance as shown in the *Functional Block Diagram*. Therefore the LM35 can only source current and it's sinking capability is limited to 1 μA.

7.2 Functional Block Diagram

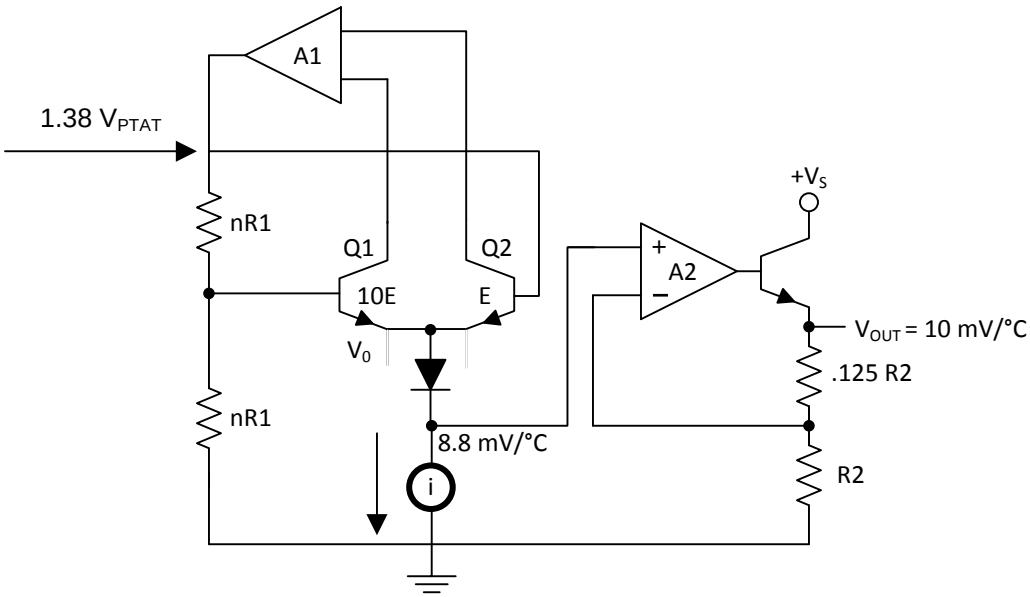

7.3 Feature Description

7.3.1 LM35 Transfer Function

The accuracy specifications of the LM35 are given with respect to a simple linear transfer function:

V_{OUT} = 10 mv/°C × T

where

- V_{OUT} is the LM35 output voltage
- T is the temperature in °C (1)

7.4 Device Functional Modes

The only functional mode of the LM35 is that it has an analog output directly proportional to temperature.

8 Application and Implementation

NOTE

Information in the following applications sections is not part of the TI component specification, and TI does not warrant its accuracy or completeness. TI's customers are responsible for determining suitability of components for their purposes. Customers should validate and test their design implementation to confirm system functionality.

8.1 Application Information

The features of the LM35 make it suitable for many general temperature sensing applications. Multiple package options expand on it's flexibility.

8.1.1 Capacitive Drive Capability

Like most micropower circuits, the LM35 device has a limited ability to drive heavy capacitive loads. Alone, the LM35 device is able to drive 50 pF without special precautions. If heavier loads are anticipated, isolating or decoupling the load with a resistor is easy (see Figure 12). The tolerance of capacitance can be improved with a series R-C damper from output to ground (see Figure 13).

When the LM35 device is applied with a 200-Ω load resistor as shown in Figure 16, Figure 17, or Figure 19, the device is relatively immune to wiring capacitance because the capacitance forms a bypass from ground to input and not on the output. However, as with any linear circuit connected to wires in a hostile environment, performance is affected adversely by intense electromagnetic sources (such as relays, radio transmitters, motors with arcing brushes, and SCR transients), because the wiring acts as a receiving antenna and the internal junctions act as rectifiers. For best results in such cases, a bypass capacitor from V_{IN} to ground and a series R-C damper, such as 75 Ω in series with 0.2 or 1 μF from output to ground, are often useful. Examples are shown in Figure 13, Figure 24, and Figure 25.

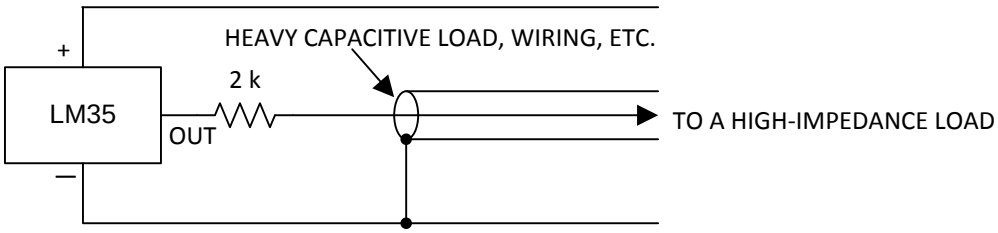

Figure 12. LM35 with Decoupling from Capacitive Load

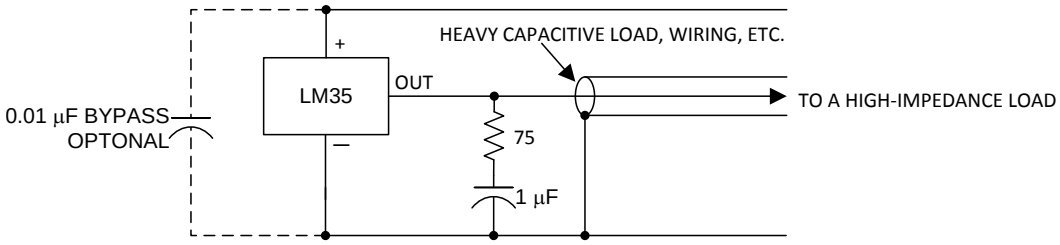

Figure 13. LM35 with R-C Damper

8.2 Typical Application

8.2.1 Basic Centigrade Temperature Sensor

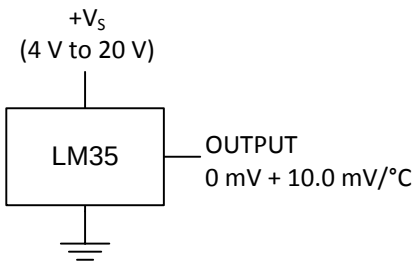

Figure 14. Basic Centigrade Temperature Sensor (2 °C to 150 °C)

8.2.1.1 Design Requirements

Table 1. Design Parameters

PARAMETER	VALUE
Accuracy at 25°C	±0.5°C
Accuracy from –55 °C to 150°C	±1°C
Temperature Slope	10 mV/°C

8.2.1.2 Detailed Design Procedure

Because the LM35 device is a simple temperature sensor that provides an analog output, design requirements related to layout are more important than electrical requirements. For a detailed description, refer to the *Layout*.

8.2.1.3 Application Curve

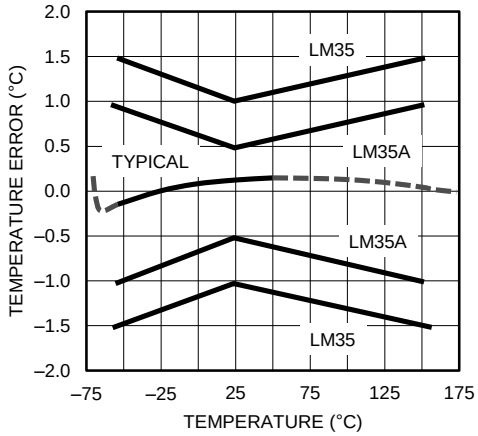

Figure 15. Accuracy vs Temperature (Ensured)

8.3 System Examples

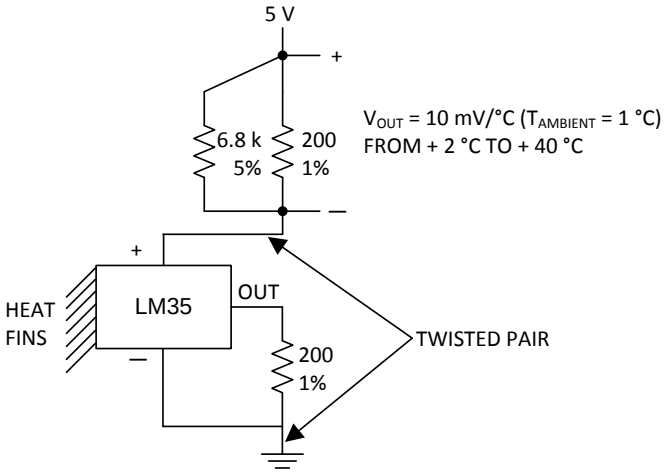

Figure 16. Two-Wire Remote Temperature Sensor (Grounded Sensor)

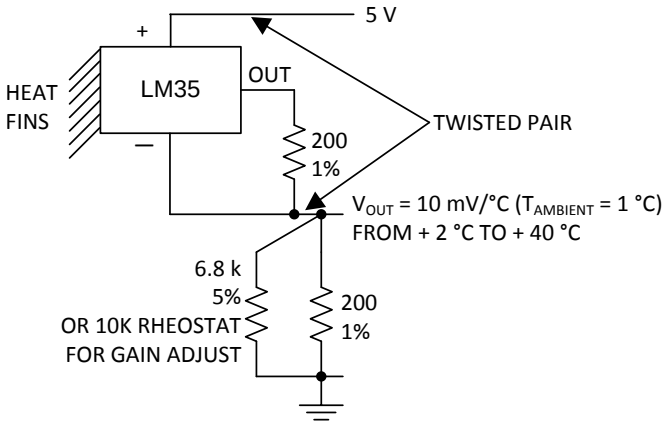

Figure 17. Two-Wire Remote Temperature Sensor (Output Referred to Ground)

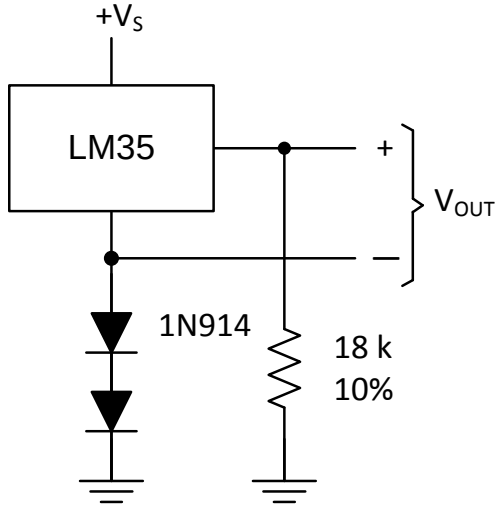

Figure 18. Temperature Sensor, Single Supply (−55° to +150°C)

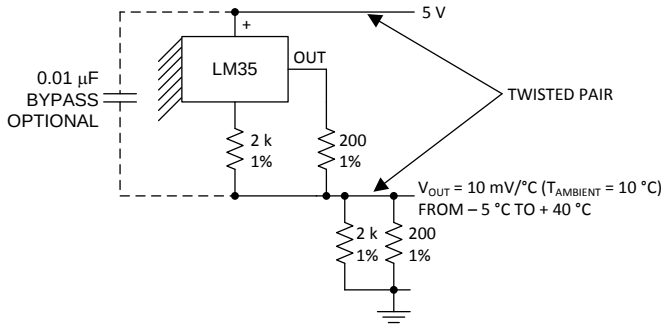

Figure 19. Two-Wire Remote Temperature Sensor (Output Referred to Ground)

System Examples (continued)

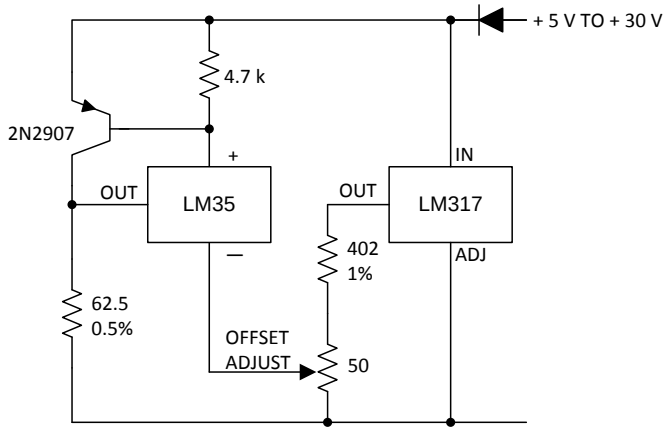

Figure 20. 4-To-20 mA Current Source (0°C to 100°C)

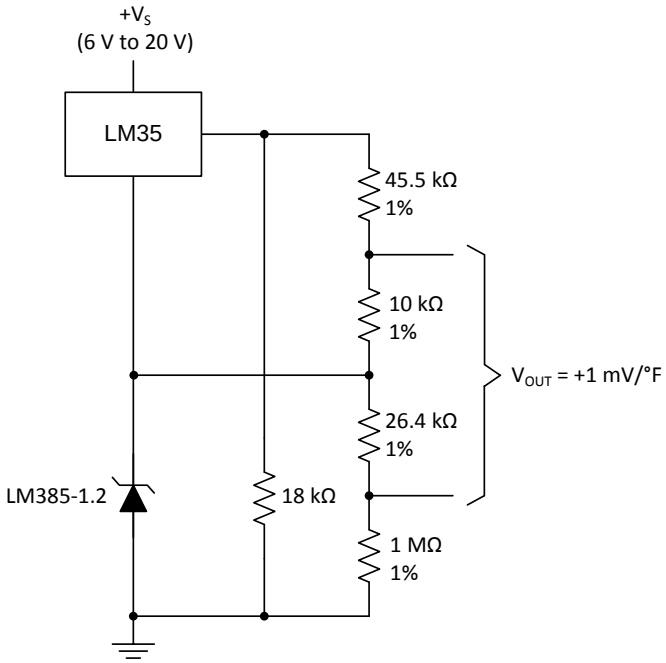

Figure 21. Fahrenheit Thermometer

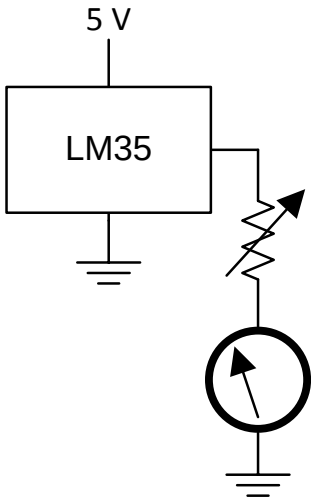

Figure 22. Centigrade Thermometer (Analog Meter)

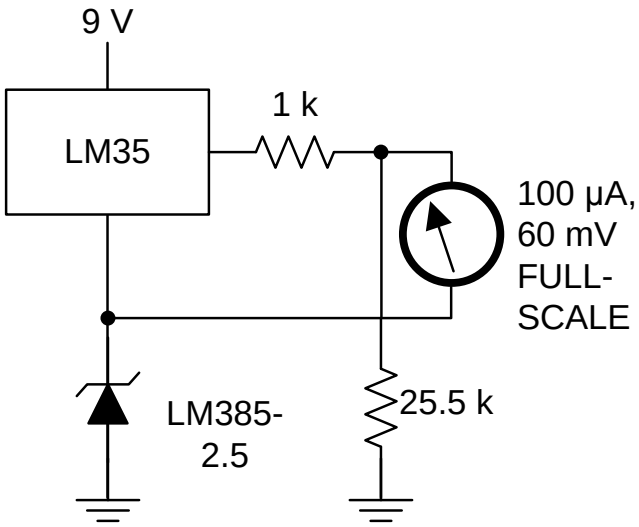

Figure 23. Fahrenheit Thermometer, Expanded Scale Thermometer (50°F to 80°F, for Example Shown)

System Examples (continued)

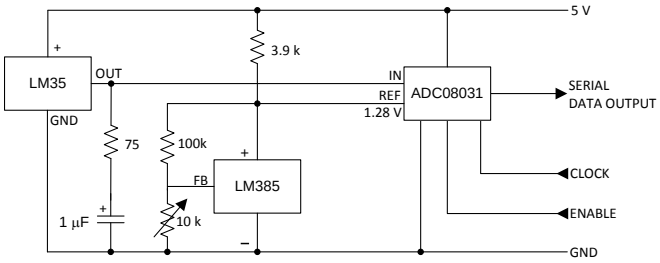

Figure 24. Temperature to Digital Converter (Serial Output) (128°C Full Scale)

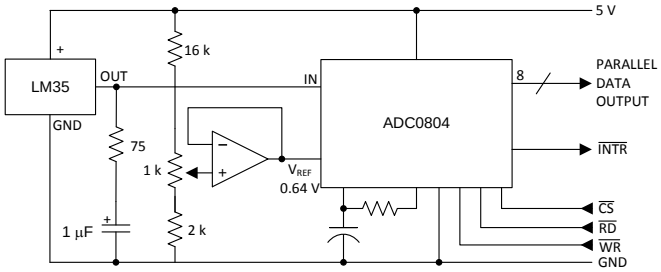

Figure 25. Temperature to Digital Converter (Parallel TRI-STATE Outputs for Standard Data Bus to µP Interface) (128°C Full Scale)

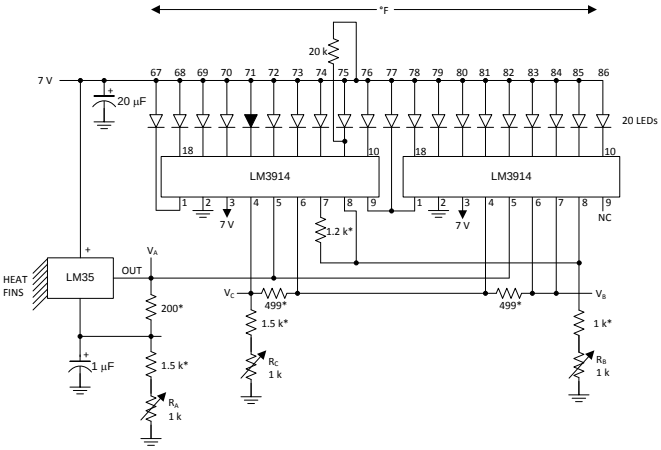

*=1% or 2% film resistor

Trim R_B for V_B = 3.075 V

Trim R_C for V_C = 1.955 V

Trim R_A for V_A = 0.075 V + 100 mV/°C ×$T_{ambient}$

Example, V_A = 2.275 V at 22°C

Figure 26. Bar-Graph Temperature Display (Dot Mode)

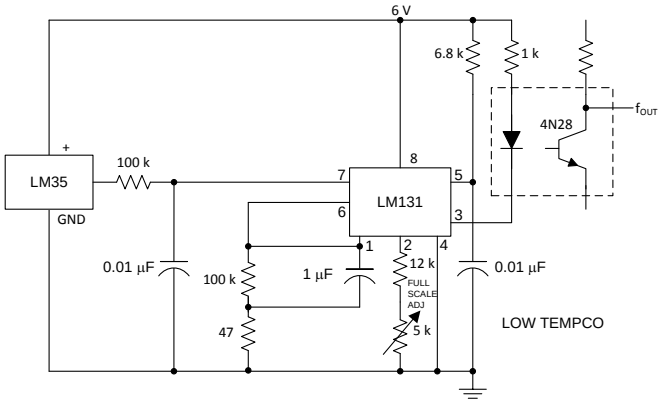

Figure 27. LM35 With Voltage-To-Frequency Converter and Isolated Output (2°C to 150°C; 20 to 1500 Hz)

9 Power Supply Recommendations

The LM35 device has a very wide 4-V to 30-V power supply voltage range, which makes it ideal for many applications. In noisy environments, TI recommends adding a 0.1 μF from V+ to GND to bypass the power supply voltage. Larger capacitances maybe required and are dependent on the power-supply noise.

10 Layout

10.1 Layout Guidelines

The LM35 is easily applied in the same way as other integrated-circuit temperature sensors. Glue or cement the device to a surface and the temperature should be within about 0.01°C of the surface temperature.

The 0.01°C proximity presumes that the ambient air temperature is almost the same as the surface temperature. If the air temperature were much higher or lower than the surface temperature, the actual temperature of the LM35 die would be at an intermediate temperature between the surface temperature and the air temperature; this is especially true for the TO-92 plastic package. The copper leads in the TO-92 package are the principal thermal path to carry heat into the device, so its temperature might be closer to the air temperature than to the surface temperature.

Ensure that the wiring leaving the LM35 device is held at the same temperature as the surface of interest to minimize the temperature problem. The easiest fix is to cover up these wires with a bead of epoxy. The epoxy bead will ensure that the leads and wires are all at the same temperature as the surface, and that the temperature of the LM35 die is not affected by the air temperature.

The TO-46 metal package can also be soldered to a metal surface or pipe without damage. Of course, in that case the V− terminal of the circuit will be grounded to that metal. Alternatively, mount the LM35 inside a sealed-end metal tube, and then dip into a bath or screw into a threaded hole in a tank. As with any IC, the LM35 device and accompanying wiring and circuits must be kept insulated and dry, to avoid leakage and corrosion. This is especially true if the circuit may operate at cold temperatures where condensation can occur. Printed-circuit coatings and varnishes such as a conformal coating and epoxy paints or dips are often used to insure that moisture cannot corrode the LM35 device or its connections.

These devices are sometimes soldered to a small light-weight heat fin to decrease the thermal time constant and speed up the response in slowly-moving air. On the other hand, a small thermal mass may be added to the sensor, to give the steadiest reading despite small deviations in the air temperature.

Table 2. Temperature Rise of LM35 Due To Self-heating (Thermal Resistance, $R_{\theta JA}$)

	TO, no heat sink	TO(1), small heat fin	TO-92, no heat sink	TO-92(2), small heat fin	SOIC-8, no heat sink	SOIC-8(2), small heat fin	TO-220, no heat sink
Still air	400°C/W	100°C/W	180°C/W	140°C/W	220°C/W	110°C/W	90°C/W
Moving air	100°C/W	40°C/W	90°C/W	70°C/W	105°C/W	90°C/W	26°C/W
Still oil	100°C/W	40°C/W	90°C/W	70°C/W	—	—	—
Stirred oil	50°C/W	30°C/W	45°C/W	40°C/W	—	—	—
(Clamped to metal, Infinite heat sink)	(24°C/W)		—	—	(55°C/W)		—

(1) Wakefield type 201, or 1-in disc of 0.02-in sheet brass, soldered to case, or similar.
(2) TO-92 and SOIC-8 packages glued and leads soldered to 1-in square of 1/16-in printed circuit board with 2-oz foil or similar.

10.2 Layout Example

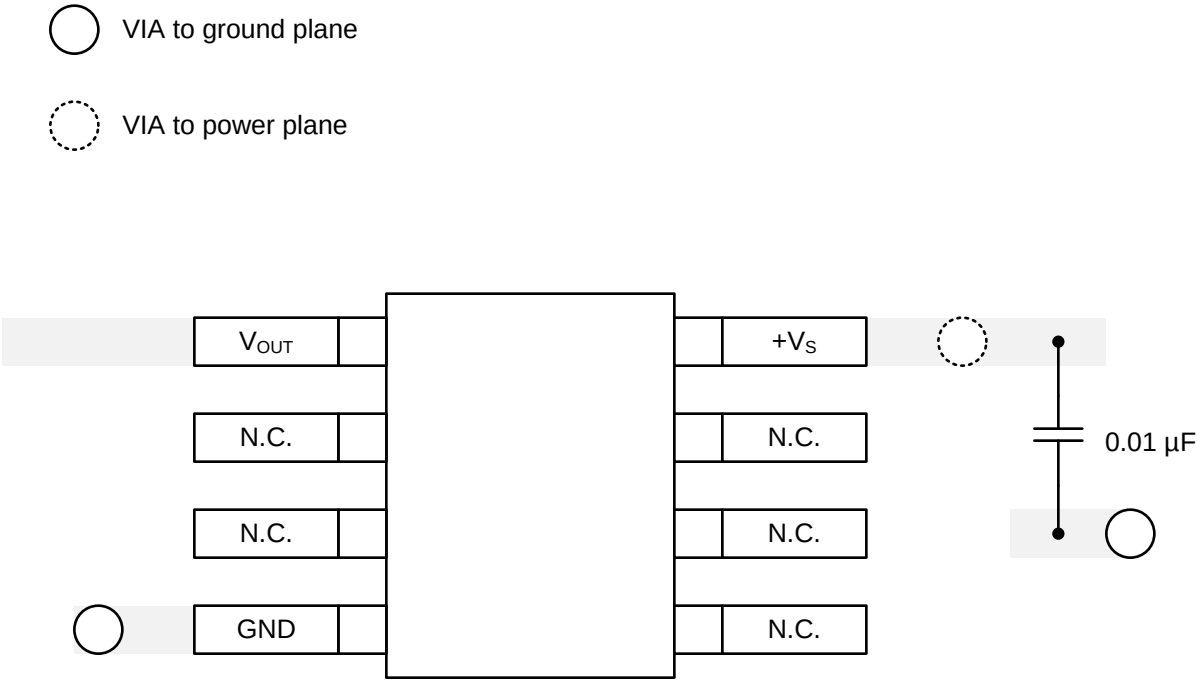

Figure 28. Layout Example

11 Device and Documentation Support

11.1 Receiving Notification of Documentation Updates

To receive notification of documentation updates, navigate to the device product folder on ti.com. In the upper right corner, click on *Alert me* to register and receive a weekly digest of any product information that has changed. For change details, review the revision history included in any revised document

11.2 Community Resources

The following links connect to TI community resources. Linked contents are provided "AS IS" by the respective contributors. They do not constitute TI specifications and do not necessarily reflect TI's views; see TI's Terms of Use.

TI E2E™ Online Community ***TI's Engineer-to-Engineer (E2E) Community.*** Created to foster collaboration among engineers. At e2e.ti.com, you can ask questions, share knowledge, explore ideas and help solve problems with fellow engineers.

Design Support ***TI's Design Support*** Quickly find helpful E2E forums along with design support tools and contact information for technical support.

11.3 Trademarks

E2E is a trademark of Texas Instruments.
All other trademarks are the property of their respective owners.

11.4 Electrostatic Discharge Caution

These devices have limited built-in ESD protection. The leads should be shorted together or the device placed in conductive foam during storage or handling to prevent electrostatic damage to the MOS gates.

11.5 Glossary

SLYZ022 — *TI Glossary*.

This glossary lists and explains terms, acronyms, and definitions.

12 Mechanical, Packaging, and Orderable Information

The following pages include mechanical, packaging, and orderable information. This information is the most current data available for the designated devices. This data is subject to change without notice and revision of this document. For browser-based versions of this data sheet, refer to the left-hand navigation.

PACKAGING INFORMATION

Orderable Device	Status (1)	Package Type	Package Drawing	Pins	Package Qty	Eco Plan (2)	Lead/Ball Finish (6)	MSL Peak Temp (3)	Op Temp (°C)	Device Marking (4/5)	Samples
LM35AH	ACTIVE	TO	NDV	3	500	TBD	Call TI	Call TI	-55 to 150	(LM35AH, LM35AH)	Samples
LM35AH/NOPB	ACTIVE	TO	NDV	3	500	Green (RoHS & no Sb/Br)	Call TI	Level-1-NA-UNLIM	-55 to 150	(LM35AH, LM35AH)	Samples
LM35CAH	ACTIVE	TO	NDV	3	500	TBD	Call TI	Call TI	-40 to 110	(LM35CAH, LM35CAH)	Samples
LM35CAH/NOPB	ACTIVE	TO	NDV	3	500	Green (RoHS & no Sb/Br)	Call TI	Level-1-NA-UNLIM	-40 to 110	(LM35CAH, LM35CAH)	Samples
LM35CAZ/LFT4	ACTIVE	TO-92	LP	3	2000	Green (RoHS & no Sb/Br)	CU SN	N / A for Pkg Type		LM35 CAZ	Samples
LM35CAZ/NOPB	ACTIVE	TO-92	LP	3	1800	Green (RoHS & no Sb/Br)	CU SN	N / A for Pkg Type	-40 to 110	LM35 CAZ	Samples
LM35CH	ACTIVE	TO	NDV	3	500	TBD	Call TI	Call TI	-40 to 110	(LM35CH, LM35CH)	Samples
LM35CH/NOPB	ACTIVE	TO	NDV	3	500	Green (RoHS & no Sb/Br)	Call TI	Level-1-NA-UNLIM	-40 to 110	(LM35CH, LM35CH)	Samples
LM35CZ/LFT1	ACTIVE	TO-92	LP	3	2000	Green (RoHS & no Sb/Br)	CU SN	N / A for Pkg Type		LM35 CZ	Samples
LM35CZ/NOPB	ACTIVE	TO-92	LP	3	1800	Green (RoHS & no Sb/Br)	CU SN	N / A for Pkg Type	-40 to 110	LM35 CZ	Samples
LM35DH	ACTIVE	TO	NDV	3	1000	TBD	Call TI	Call TI	0 to 70	(LM35DH, LM35DH)	Samples
LM35DH/NOPB	ACTIVE	TO	NDV	3	1000	Green (RoHS & no Sb/Br)	Call TI | POST-PLATE	Level-1-NA-UNLIM	0 to 70	(LM35DH, LM35DH)	Samples
LM35DM	NRND	SOIC	D	8	95	TBD	Call TI	Call TI	0 to 100	LM35D M	
LM35DM/NOPB	ACTIVE	SOIC	D	8	95	Green (RoHS & no Sb/Br)	CU SN	Level-1-260C-UNLIM	0 to 100	LM35D M	Samples
LM35DMX	NRND	SOIC	D	8	2500	TBD	Call TI	Call TI	0 to 100	LM35D M	
LM35DMX/NOPB	ACTIVE	SOIC	D	8	2500	Green (RoHS & no Sb/Br)	CU SN	Level-1-260C-UNLIM	0 to 100	LM35D M	Samples
LM35DT	NRND	TO-220	NEB	3	45	TBD	Call TI	Call TI	0 to 100	LM35DT	
LM35DT/NOPB	ACTIVE	TO-220	NEB	3	45	Green (RoHS & no Sb/Br)	CU SN	Level-1-NA-UNLIM	0 to 100	LM35DT	Samples

Orderable Device	Status (1)	Package Type	Package Drawing	Pins	Package Qty	Eco Plan (2)	Lead/Ball Finish (6)	MSL Peak Temp (3)	Op Temp (°C)	Device Marking (4/5)	Samples
LM35DZ/LFT1	ACTIVE	TO-92	LP	3	2000	Green (RoHS & no Sb/Br)	CU SN	N / A for Pkg Type		LM35 DZ	Samples
LM35DZ/LFT4	ACTIVE	TO-92	LP	3	2000	Green (RoHS & no Sb/Br)	CU SN	N / A for Pkg Type		LM35 DZ	Samples
LM35DZ/NOPB	ACTIVE	TO-92	LP	3	1800	Green (RoHS & no Sb/Br)	CU SN	N / A for Pkg Type	0 to 100	LM35 DZ	Samples
LM35H	ACTIVE	TO	NDV	3	500	TBD	Call TI	Call TI	-55 to 150	(LM35H, LM35H)	Samples
LM35H/NOPB	ACTIVE	TO	NDV	3	500	Green (RoHS & no Sb/Br)	Call TI	Level-1-NA-UNLIM	-55 to 150	(LM35H, LM35H)	Samples

(1) The marketing status values are defined as follows:
ACTIVE: Product device recommended for new designs.
LIFEBUY: TI has announced that the device will be discontinued, and a lifetime-buy period is in effect.
NRND: Not recommended for new designs. Device is in production to support existing customers, but TI does not recommend using this part in a new design.
PREVIEW: Device has been announced but is not in production. Samples may or may not be available.
OBSOLETE: TI has discontinued the production of the device.

(2) **RoHS:** TI defines "RoHS" to mean semiconductor products that are compliant with the current EU RoHS requirements for all 10 RoHS substances, including the requirement that RoHS substance do not exceed 0.1% by weight in homogeneous materials. Where designed to be soldered at high temperatures, "RoHS" products are suitable for use in specified lead-free processes. TI may reference these types of products as "Pb-Free".
RoHS Exempt: TI defines "RoHS Exempt" to mean products that contain lead but are compliant with EU RoHS pursuant to a specific EU RoHS exemption.
Green: TI defines "Green" to mean the content of Chlorine (Cl) and Bromine (Br) based flame retardants meet JS709B low halogen requirements of <=1000ppm threshold. Antimony trioxide based flame retardants must also meet the <=1000ppm threshold requirement.

(3) MSL, Peak Temp. - The Moisture Sensitivity Level rating according to the JEDEC industry standard classifications, and peak solder temperature.

(4) There may be additional marking, which relates to the logo, the lot trace code information, or the environmental category on the device.

(5) Multiple Device Markings will be inside parentheses. Only one Device Marking contained in parentheses and separated by a "~" will appear on a device. If a line is indented then it is a continuation of the previous line and the two combined represent the entire Device Marking for that device.

(6) Lead/Ball Finish - Orderable Devices may have multiple material finish options. Finish options are separated by a vertical ruled line. Lead/Ball Finish values may wrap to two lines if the finish value exceeds the maximum column width.

Important Information and Disclaimer: The information provided on this page represents TI's knowledge and belief as of the date that it is provided. TI bases its knowledge and belief on information provided by third parties, and makes no representation or warranty as to the accuracy of such information. Efforts are underway to better integrate information from third parties. TI has taken and

continues to take reasonable steps to provide representative and accurate information but may not have conducted destructive testing or chemical analysis on incoming materials and chemicals.
TI and TI suppliers consider certain information to be proprietary, and thus CAS numbers and other limited information may not be available for release.

In no event shall TI's liability arising out of such information exceed the total purchase price of the TI part(s) at issue in this document sold by TI to Customer on an annual basis.

TAPE AND REEL INFORMATION

REEL DIMENSIONS

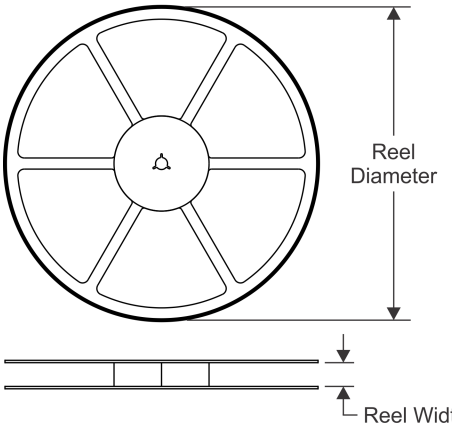

TAPE DIMENSIONS

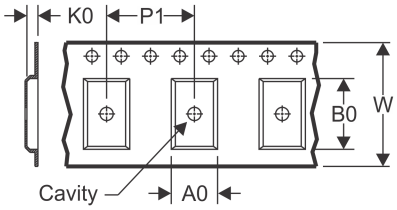

A0	Dimension designed to accommodate the component width
B0	Dimension designed to accommodate the component length
K0	Dimension designed to accommodate the component thickness
W	Overall width of the carrier tape
P1	Pitch between successive cavity centers

QUADRANT ASSIGNMENTS FOR PIN 1 ORIENTATION IN TAPE

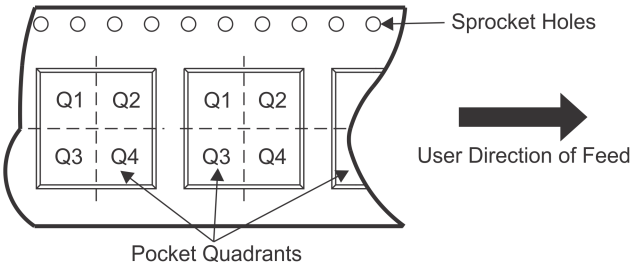

*All dimensions are nominal

Device	Package Type	Package Drawing	Pins	SPQ	Reel Diameter (mm)	Reel Width W1 (mm)	A0 (mm)	B0 (mm)	K0 (mm)	P1 (mm)	W (mm)	Pin1 Quadrant
LM35DMX	SOIC	D	8	2500	330.0	12.4	6.5	5.4	2.0	8.0	12.0	Q1
LM35DMX/NOPB	SOIC	D	8	2500	330.0	12.4	6.5	5.4	2.0	8.0	12.0	Q1

TAPE AND REEL BOX DIMENSIONS

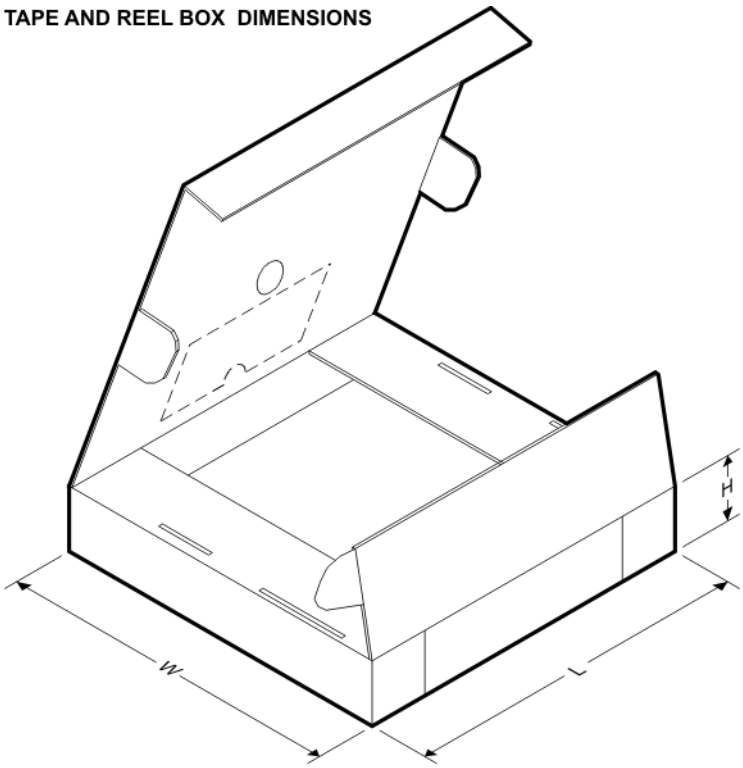

*All dimensions are nominal

Device	Package Type	Package Drawing	Pins	SPQ	Length (mm)	Width (mm)	Height (mm)
LM35DMX	SOIC	D	8	2500	367.0	367.0	35.0
LM35DMX/NOPB	SOIC	D	8	2500	367.0	367.0	35.0

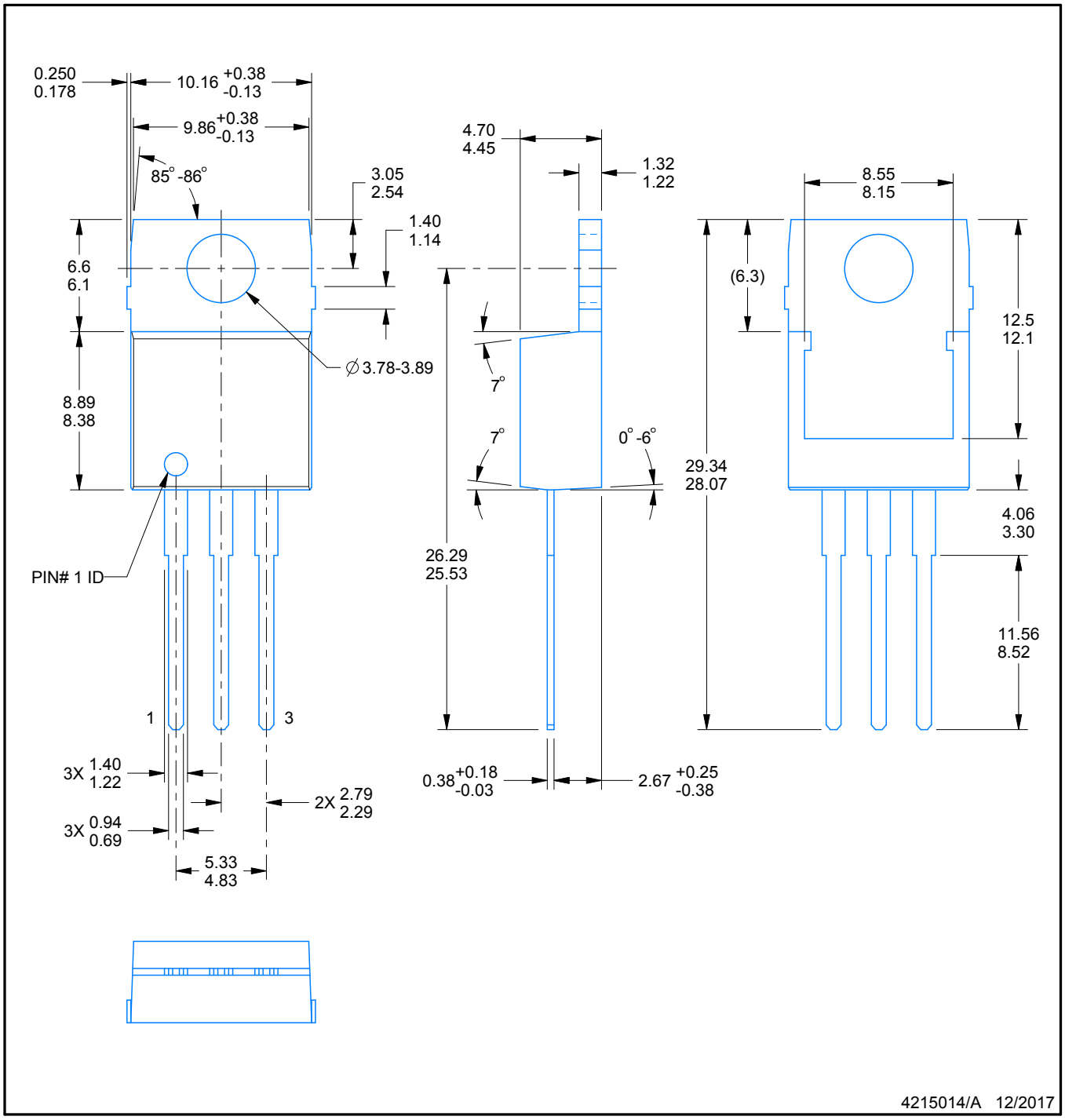

NOTES:

1. All controlling linear dimensions are in inches. Dimensions in brackets are in millimeters. Any dimension in brackets or parenthesis are for reference only. Dimensioning and tolerancing per ASME Y14.5M.
2. This drawing is subject to change without notice.
3. Reference JEDEC registration TO-220.

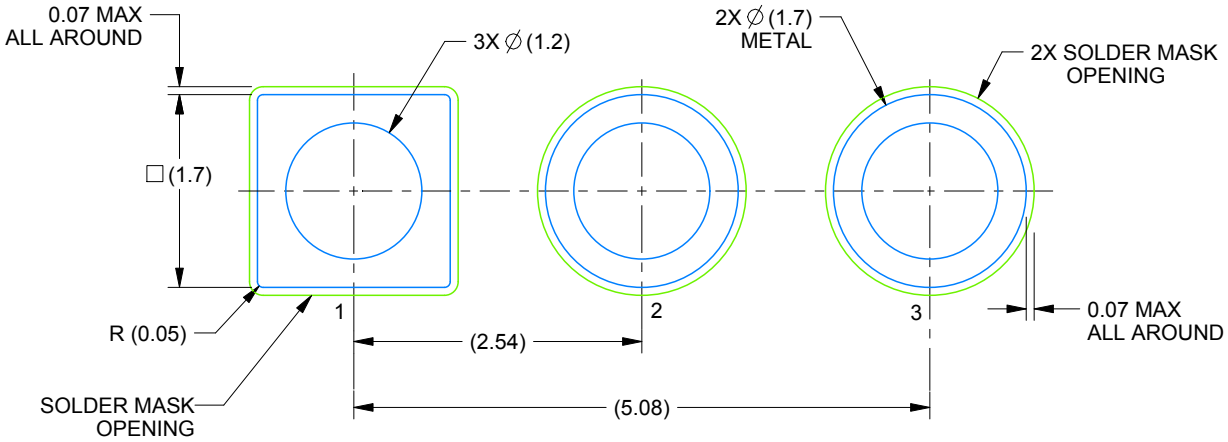

LAND PATTERN EXAMPLE
NON-SOLDER MASK DEFINED
SCALE:15X

4215014/A 12/2017

Images above are just a representation of the package family, actual package may vary.
Refer to the product data sheet for package details.

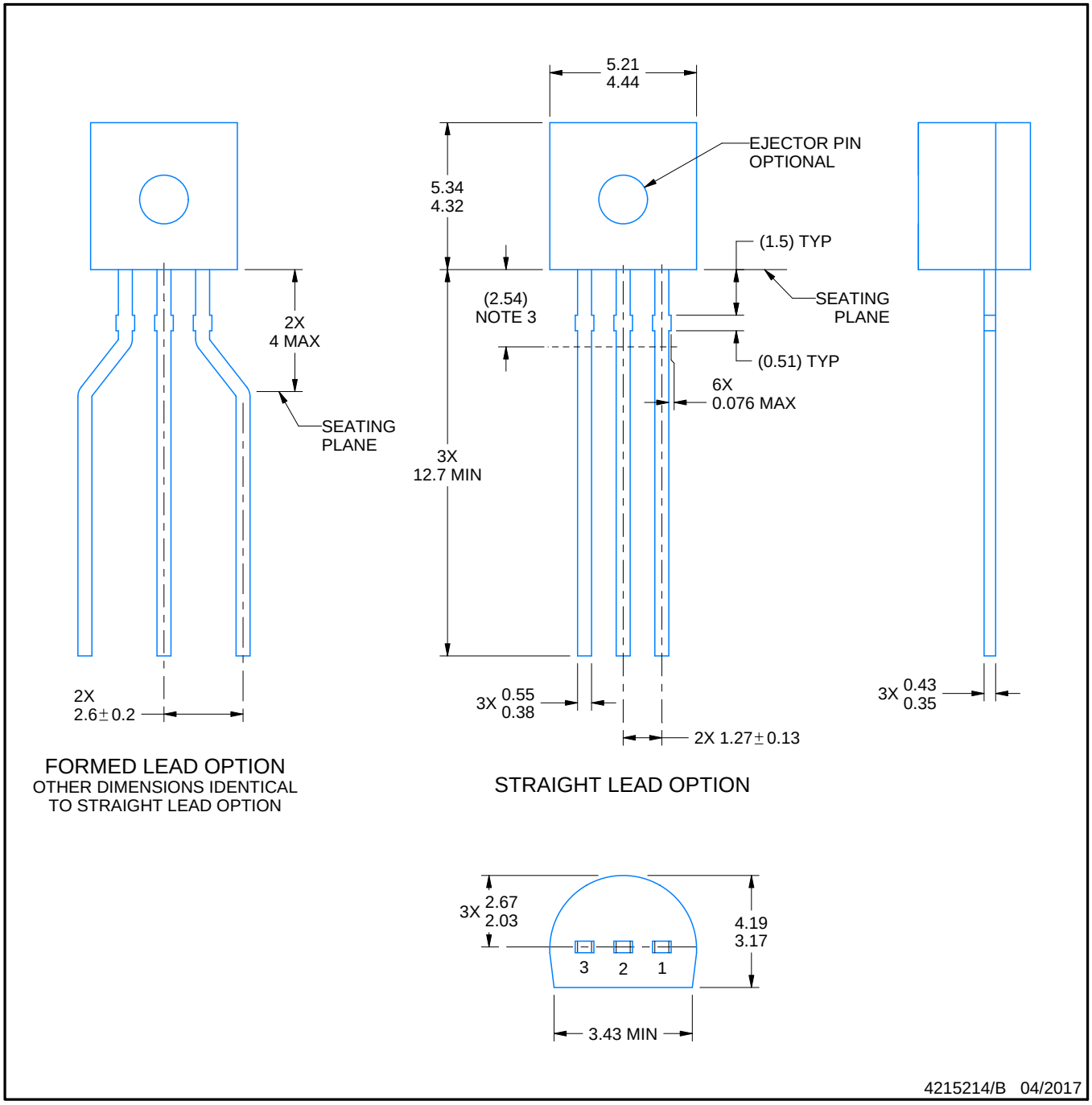

NOTES:

1. All linear dimensions are in millimeters. Any dimensions in parenthesis are for reference only. Dimensioning and tolerancing per ASME Y14.5M.
2. This drawing is subject to change without notice.
3. Lead dimensions are not controlled within this area.
4. Reference JEDEC TO-226, variation AA.
5. Shipping method:
   a. Straight lead option available in bulk pack only.
   b. Formed lead option available in tape and reel or ammo pack.
   c. Specific products can be offered in limited combinations of shipping medium and lead options.
   d. Consult product folder for more information on available options.

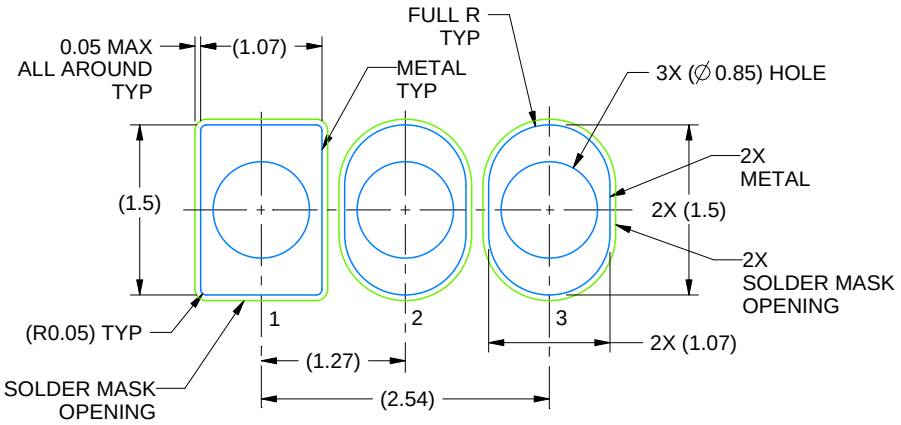

LAND PATTERN EXAMPLE
STRAIGHT LEAD OPTION
NON-SOLDER MASK DEFINED
SCALE:15X

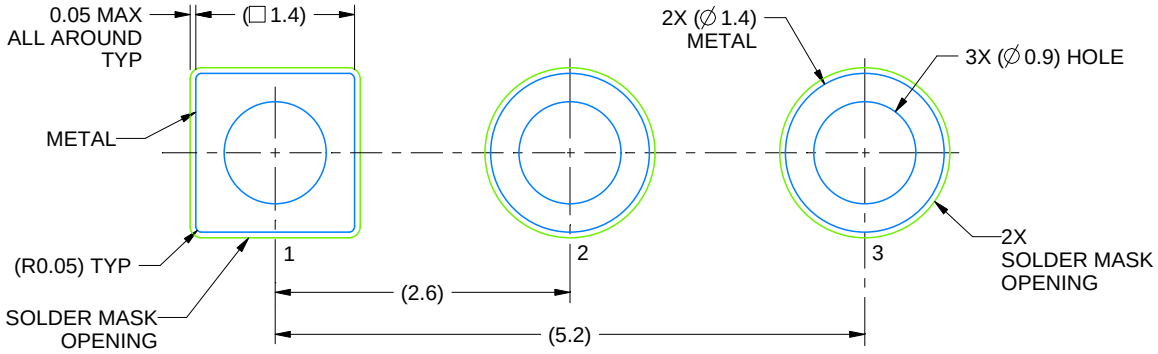

LAND PATTERN EXAMPLE
FORMED LEAD OPTION
NON-SOLDER MASK DEFINED
SCALE:15X

4215214/B 04/2017

TO-92

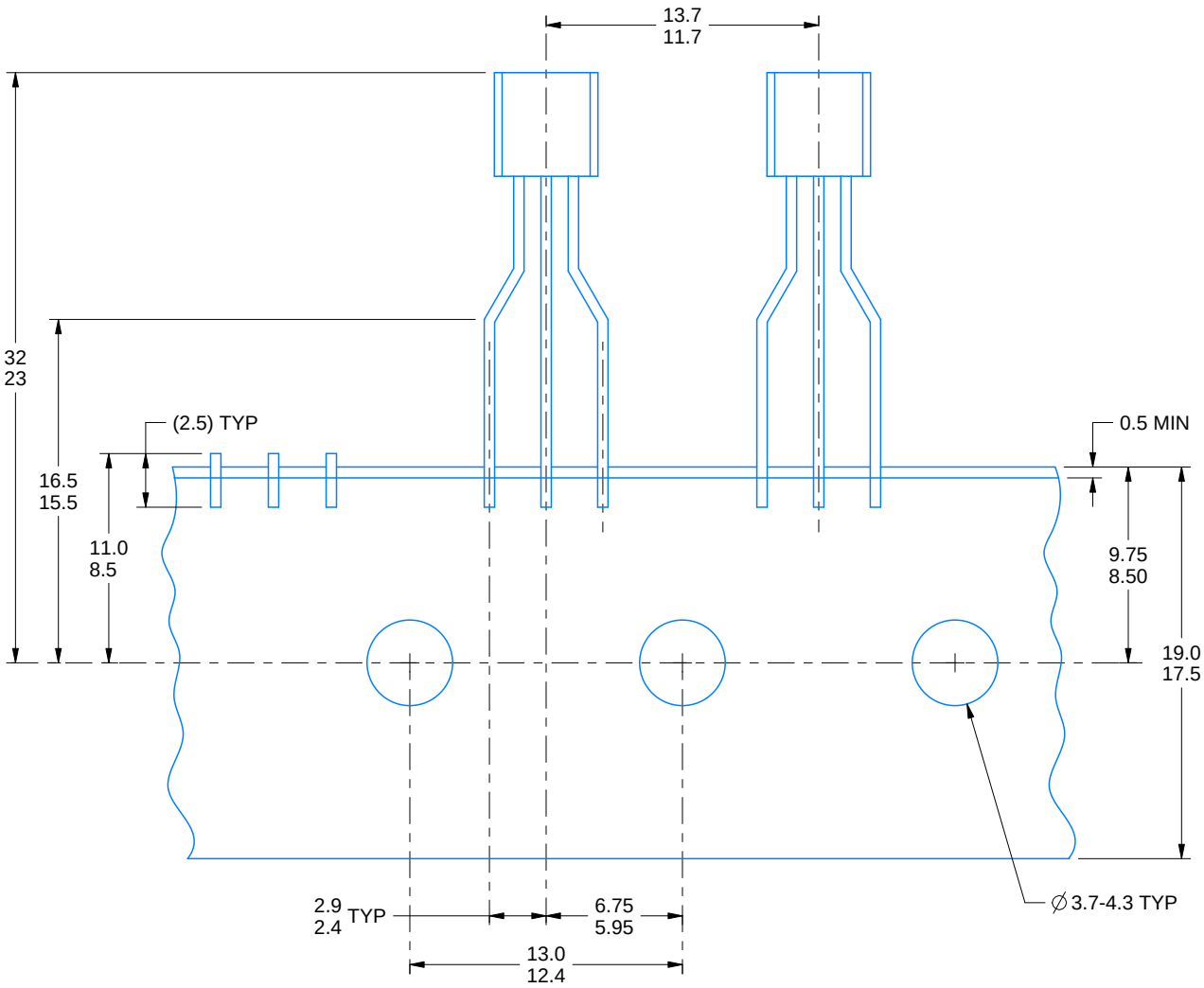

FOR FORMED LEAD OPTION PACKAGE

4215214/B 04/2017

D (R–PDSO–G8) PLASTIC SMALL OUTLINE

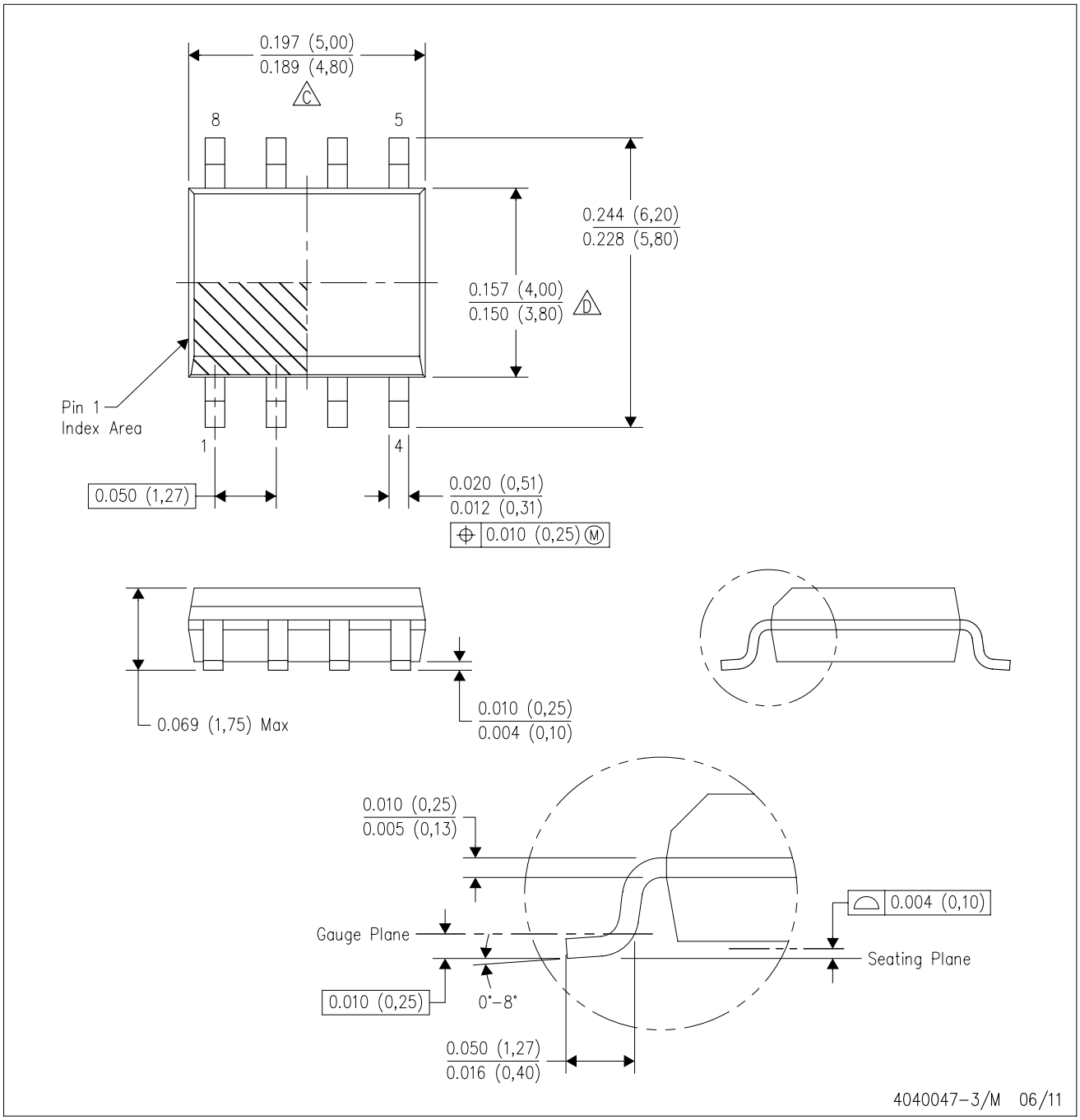

NOTES:
A. All linear dimensions are in inches (millimeters).
B. This drawing is subject to change without notice.
C. Body length does not include mold flash, protrusions, or gate burrs. Mold flash, protrusions, or gate burrs shall not exceed 0.006 (0,15) each side.
D. Body width does not include interlead flash. Interlead flash shall not exceed 0.017 (0,43) each side.
E. Reference JEDEC MS–012 variation AA.

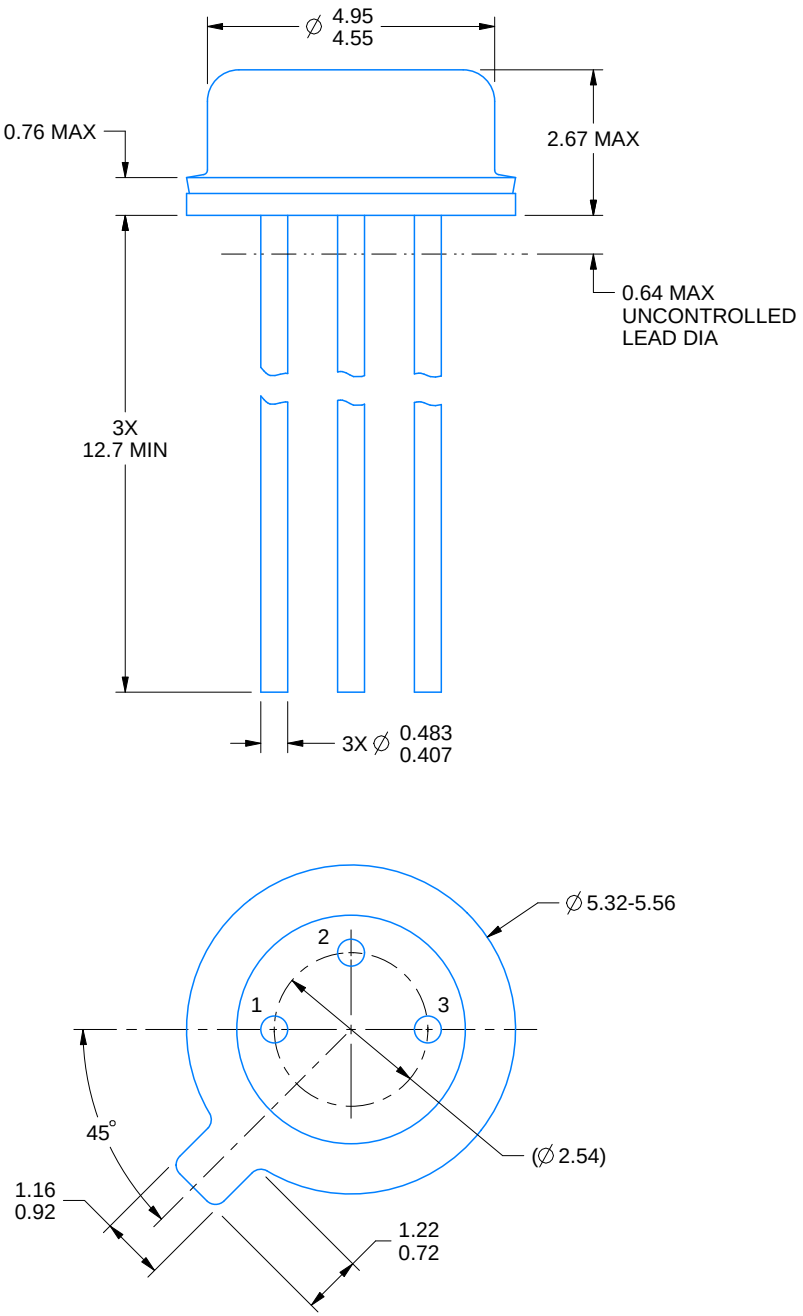

4219876/A 01/2017

NOTES:

1. All linear dimensions are in millimeters. Any dimensions in parenthesis are for reference only. Dimensioning and tolerancing per ASME Y14.5M.
2. This drawing is subject to change without notice.
3. Reference JEDEC registration TO-46.

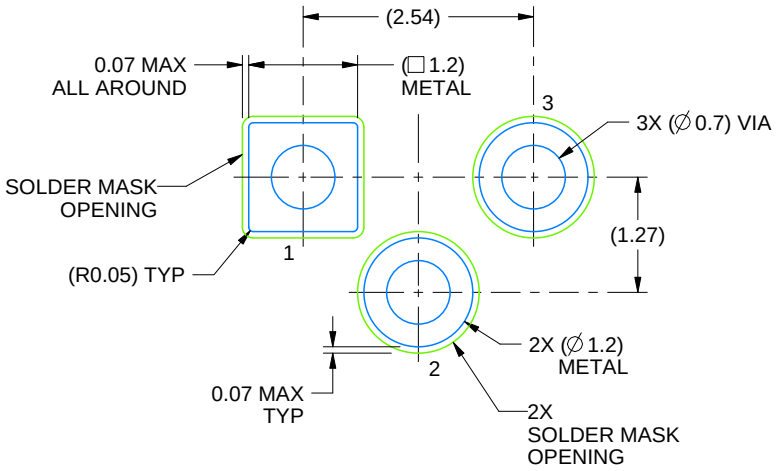

LAND PATTERN EXAMPLE
NON-SOLDER MASK DEFINED
SCALE:12X

4219876/A 01/2017

STM32F401xD STM32F401xE

ARM® Cortex®-M4 32b MCU+FPU, 105 DMIPS, 512KB Flash/96KB RAM, 11 TIMs, 1 ADC, 11 comm. interfaces

Datasheet - production data

Features

- Core: ARM® 32-bit Cortex®-M4 CPU with FPU, Adaptive real-time accelerator (ART Accelerator™) allowing 0-wait state execution from Flash memory, frequency up to 84 MHz, memory protection unit, 105 DMIPS/1.25 DMIPS/MHz (Dhrystone 2.1), and DSP instructions
- Memories
  - up to 512 Kbytes of Flash memory
  - up to 96 Kbytes of SRAM
- Clock, reset and supply management
  - 1.7 V to 3.6 V application supply and I/Os
  - POR, PDR, PVD and BOR
  - 4-to-26 MHz crystal oscillator
  - Internal 16 MHz factory-trimmed RC
  - 32 kHz oscillator for RTC with calibration
  - Internal 32 kHz RC with calibration
- Power consumption
  - Run: 146 µA/MHz (peripheral off)
  - Stop (Flash in Stop mode, fast wakeup time): 42 µA Typ @ 25C; 65 µA max @25 °C
  - Stop (Flash in Deep power down mode, fast wakeup time): down to 10 µA @ 25 °C; 30 µA max @25 °C
  - Standby: 2.4 µA @25 °C / 1.7 V without RTC; 12 µA @85 °C @1.7 V
  - V_{BAT} supply for RTC: 1 µA @25 °C
- 1×12-bit, 2.4 MSPS A/D converter: up to 16 channels
- General-purpose DMA: 16-stream DMA controllers with FIFOs and burst support
- Up to 11 timers: up to six 16-bit, two 32-bit timers up to 84 MHz, each with up to four IC/OC/PWM or pulse counter and quadrature (incremental) encoder input, two watchdog timers (independent and window) and a SysTick timer

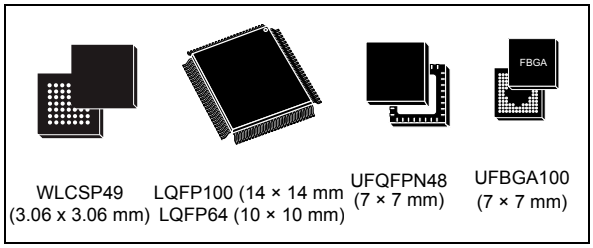

- Debug mode
  - Serial wire debug (SWD) & JTAG interfaces
  - Cortex®-M4 Embedded Trace Macrocell™
- Up to 81 I/O ports with interrupt capability
  - Up to 78 fast I/Os up to 42 MHz
  - All I/O ports are 5 V-tolerant
- Up to 12 communication interfaces
  - Up to 3 x I^2C interfaces (SMBus/PMBus)
  - Up to 3 USARTs (2 x 10.5 Mbit/s, 1 x 5.25 Mbit/s), ISO 7816 interface, LIN, IrDA, modem control)
  - Up to 4 SPIs (up to 42Mbit/s at f_{CPU} = 84 MHz), SPI2 and SPI3 with muxed full-duplex I^2S to achieve audio class accuracy via internal audio PLL or external clock
  - SDIO interface
  - Advanced connectivity: USB 2.0 full-speed device/host/OTG controller with on-chip PHY
- CRC calculation unit
- 96-bit unique ID
- RTC: subsecond accuracy, hardware calendar
- All packages (WLCSP49, LQFP64/100, UFQFPN48, UFBGA100) are ECOPACK®2

Table 1. Device summary

Reference	Part number
STM32F401xD	STM32F401CD, STM32F401RD, STM32F401VD
STM32F401xE	STM32F401CE, STM32F401RE, STM32F401VE

Contents

List of tables

List of figures

1 Introduction

This datasheet provides the description of the STM32F401xD/xE line of microcontrollers.

The STM32F401xD/xE datasheet should be read in conjunction with RM0368 reference manual which is available from the STMicroelectronics website *www.st.com*. It includes all information concerning Flash memory programming.

For information on the Cortex®-M4 core, please refer to the Cortex®-M4 programming manual (PM0214) available from *www.st.com*.

2 Description

The STM32F401xD/xE devices are based on the high-performance ARM® Cortex® -M4 32-bit RISC core operating at a frequency of up to 84 MHz. Its Cortex®-M4 core features a Floating point unit (FPU) single precision which supports all ARM single-precision data-processing instructions and data types. It also implements a full set of DSP instructions and a memory protection unit (MPU) which enhances application security.

The STM32F401xD/xE incorporate high-speed embedded memories (512 Kbytes of Flash memory, 96 Kbytes of SRAM), and an extensive range of enhanced I/Os and peripherals connected to two APB buses, two AHB buses and a 32-bit multi-AHB bus matrix.

All devices offer one 12-bit ADC, a low-power RTC, six general-purpose 16-bit timers including one PWM timer for motor control, two general-purpose 32-bit timers. They also feature standard and advanced communication interfaces.

- Up to three I^2Cs
- Up to four SPIs
- Two full duplex I^2Ss. To achieve audio class accuracy, the I^2S peripherals can be clocked via a dedicated internal audio PLL or via an external clock to allow synchronization.
- Three USARTs
- SDIO interface
- USB 2.0 OTG full speed interface

Refer to for the peripherals available for each part number.

The STM32F401xD/xE operate in the –40 to +105 °C temperature range from a 1.7 (PDR OFF) to 3.6 V power supply. A comprehensive set of power-saving mode allows the design of low-power applications.

These features make the STM32F401xD/xE microcontrollers suitable for a wide range of applications:

- Motor drive and application control
- Medical equipment
- Industrial applications: PLC, inverters, circuit breakers
- Printers, and scanners
- Alarm systems, video intercom, and HVAC
- Home audio appliances
- Mobile phone sensor hub

Figure 3 shows the general block diagram of the devices.

Table 2. STM32F401xD/xE features and peripheral counts

Peripherals		STM32F401xD			STM32F401xE		
Flash memory in Kbytes		384			512		
SRAM in Kbytes	System	96					
Timers	General-purpose	7					
	Advanced-control	1					
Communication interfaces	SPI/ I^2S	3/2 (full duplex)		4/2 (full duplex)	3/2 (full duplex)		4/2 (full duplex)
	I^2C	3					
	USART	3					
	SDIO	-	1		-	1	
USB OTG FS		1					
GPIOs		36	50	81	36	50	81
12-bit ADC		1					
Number of channels		10	16		10	16	
Maximum CPU frequency		84 MHz					
Operating voltage		1.7 to 3.6 V					
Operating temperatures		Ambient temperatures: –40 to +85 °C/–40 to +105 °C					
		Junction temperature: –40 to + 125 °C					
Package		WLCSP49 UFQFPN48	LQFP64	UFBGA100 LQFP100	WLCSP49 UFQFPN48	LQFP64	UFBGA100 LQFP100

2.1 Compatibility with STM32F4 series

The STM32F401xD/xE are fully software and feature compatible with the STM32F4 series (STM32F42x, STM32F43x, STM32F41x, STM32F405 and STM32F407)

The STM32F401xD/xE can be used as drop-in replacement of the other STM32F4 products but some slight changes have to be done on the PCB board.

Figure 1. Compatible board design for LQFP100 package

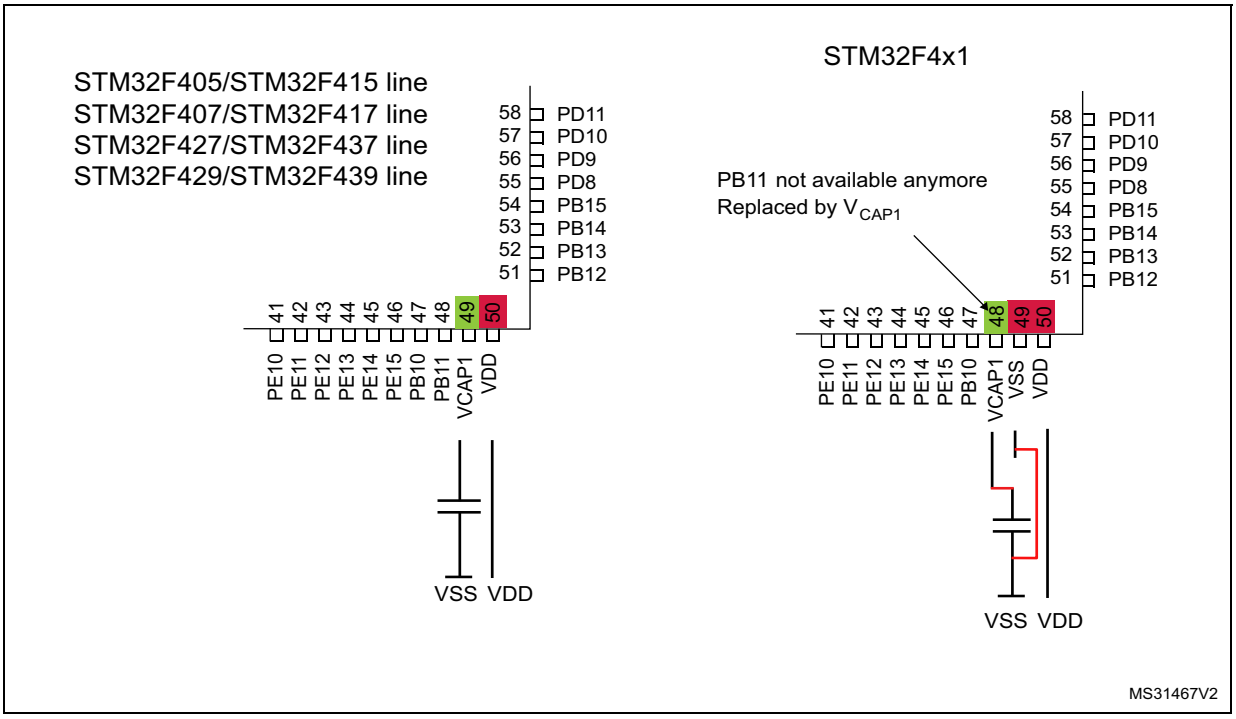

Figure 2. Compatible board design for LQFP64 package

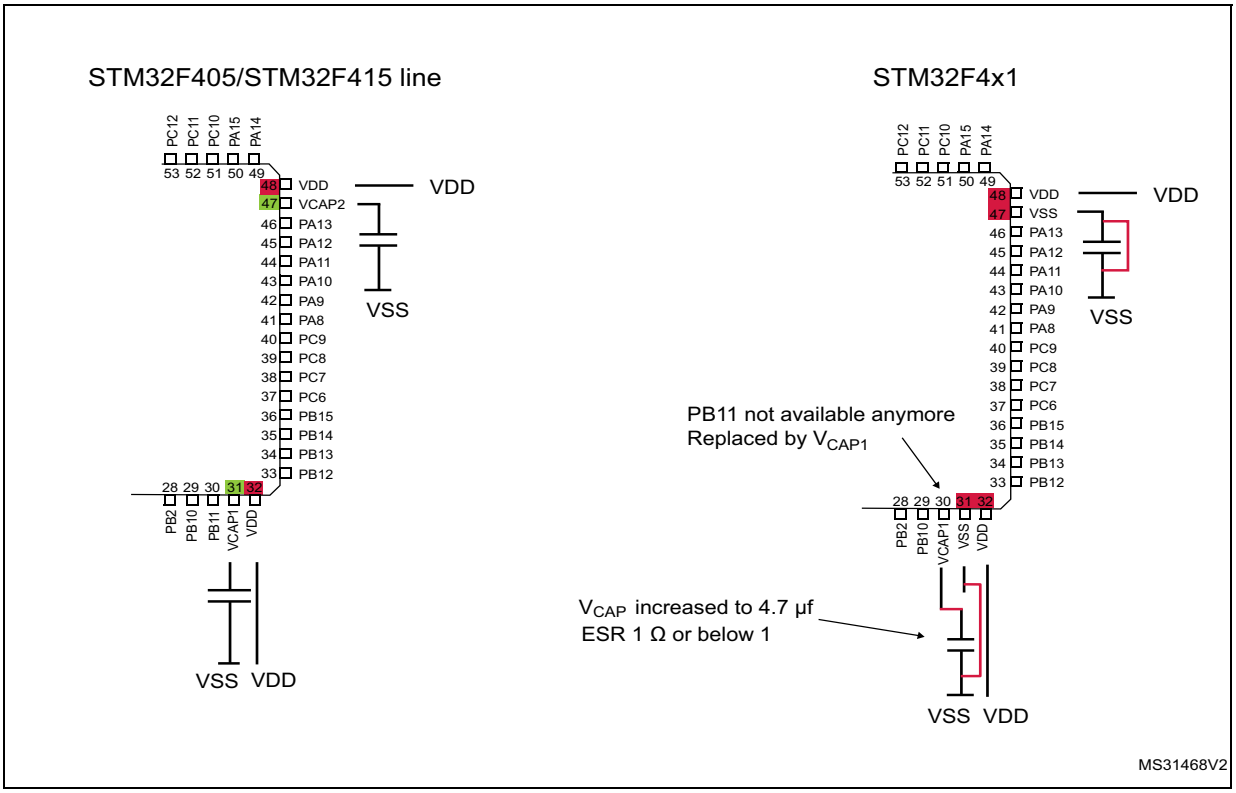

Figure 3. STM32F401xD/xE block diagram

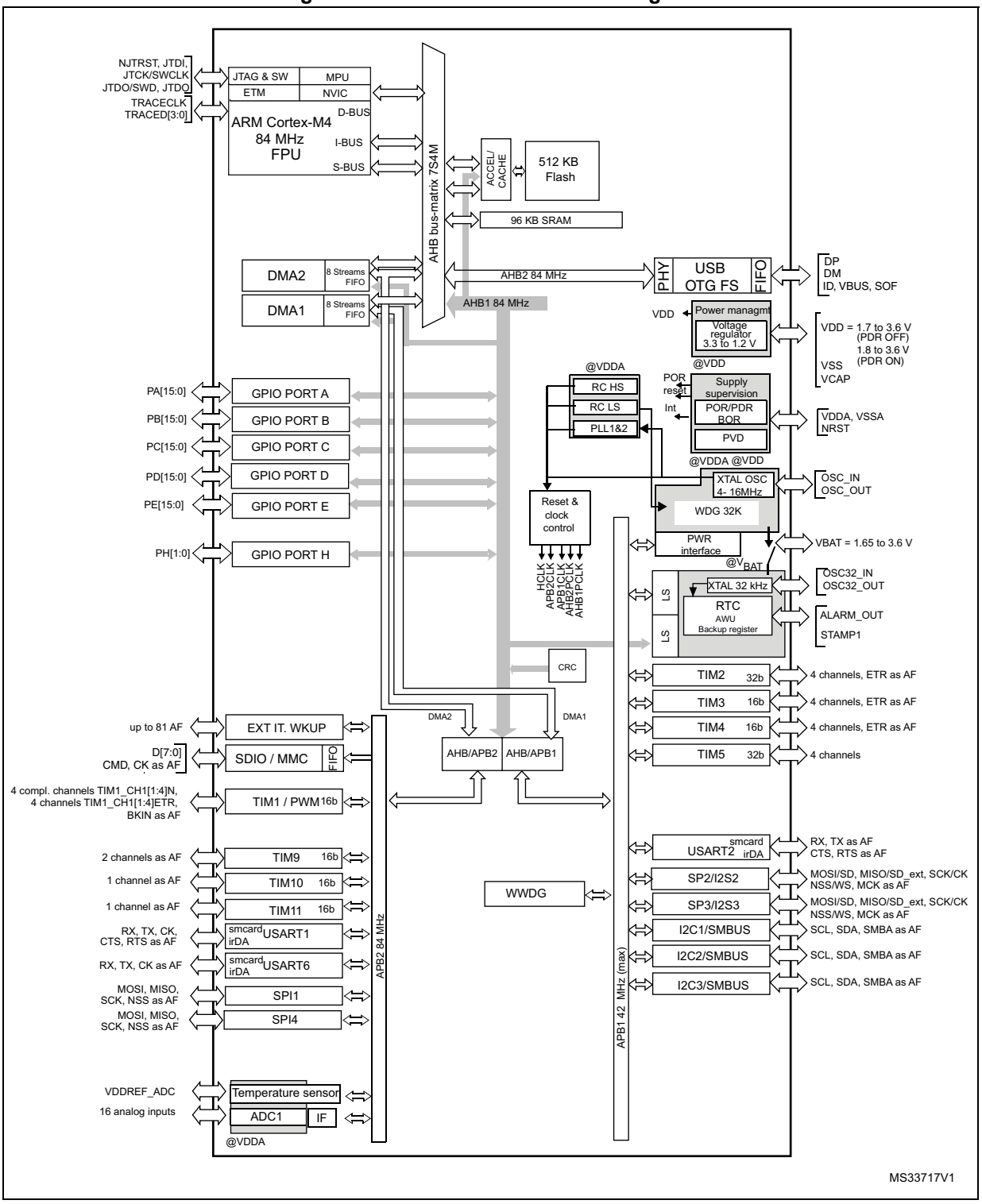

1. The timers connected to APB2 are clocked from TIMxCLK up to 84 MHz, while the timers connected to APB1 are clocked from TIMxCLK up to 42 MHz.

3 Functional overview

3.1 ARM® Cortex®-M4 with FPU core with embedded Flash and SRAM

The ARM® Cortex®-M4 with FPU processor is the latest generation of ARM processors for embedded systems. It was developed to provide a low-cost platform that meets the needs of MCU implementation, with a reduced pin count and low-power consumption, while delivering outstanding computational performance and an advanced response to interrupts.

The ARM® Cortex®-M4 with FPU 32-bit RISC processor features exceptional code-efficiency, delivering the high-performance expected from an ARM core in the memory size usually associated with 8- and 16-bit devices. The processor supports a set of DSP instructions which allow efficient signal processing and complex algorithm execution. Its single precision FPU (floating point unit) speeds up software development by using metalanguage development tools, while avoiding saturation.

The STM32F401xD/xE devices are compatible with all ARM tools and software.

Figure 3 shows the general block diagram of the STM32F401xD/xE.

Note: Cortex®-M4 with FPU is binary compatible with Cortex®-M3.

3.2 Adaptive real-time memory accelerator (ART Accelerator™)

The ART Accelerator™ is a memory accelerator which is optimized for STM32 industry-standard ARM® Cortex®-M4 with FPU processors. It balances the inherent performance advantage of the ARM® Cortex®-M4 with FPU over Flash memory technologies, which normally requires the processor to wait for the Flash memory at higher frequencies.

To release the processor full 105 DMIPS performance at this frequency, the accelerator implements an instruction prefetch queue and branch cache, which increases program execution speed from the 128-bit Flash memory. Based on CoreMark benchmark, the performance achieved thanks to the ART accelerator is equivalent to 0 wait state program execution from Flash memory at a CPU frequency up to 84 MHz.

3.3 Memory protection unit

The memory protection unit (MPU) is used to manage the CPU accesses to memory to prevent one task to accidentally corrupt the memory or resources used by any other active task. This memory area is organized into up to 8 protected areas that can in turn be divided up into 8 subareas. The protection area sizes are between 32 bytes and the whole 4 gigabytes of addressable memory.

The MPU is especially helpful for applications where some critical or certified code has to be protected against the misbehavior of other tasks. It is usually managed by an RTOS (real-time operating system). If a program accesses a memory location that is prohibited by the MPU, the RTOS can detect it and take action. In an RTOS environment, the kernel can dynamically update the MPU area setting, based on the process to be executed.

The MPU is optional and can be bypassed for applications that do not need it.

3.4 Embedded Flash memory

The devices embed 512 Kbytes of Flash memory available for storing programs and data.

3.5 CRC (cyclic redundancy check) calculation unit

The CRC (cyclic redundancy check) calculation unit is used to get a CRC code from a 32-bit data word and a fixed generator polynomial.

Among other applications, CRC-based techniques are used to verify data transmission or storage integrity. In the scope of the EN/IEC 60335-1 standard, they offer a means of verifying the Flash memory integrity. The CRC calculation unit helps compute a software signature during runtime, to be compared with a reference signature generated at link-time and stored at a given memory location.

3.6 Embedded SRAM

All devices embed:

- 96 Kbytes of system SRAM which can be accessed (read/write) at CPU clock speed with 0 wait states

3.7 Multi-AHB bus matrix

The 32-bit multi-AHB bus matrix interconnects all the masters (CPU, DMAs) and the slaves (Flash memory, RAM, AHB and APB peripherals) and ensures a seamless and efficient operation even when several high-speed peripherals work simultaneously.

Figure 4. Multi-AHB matrix

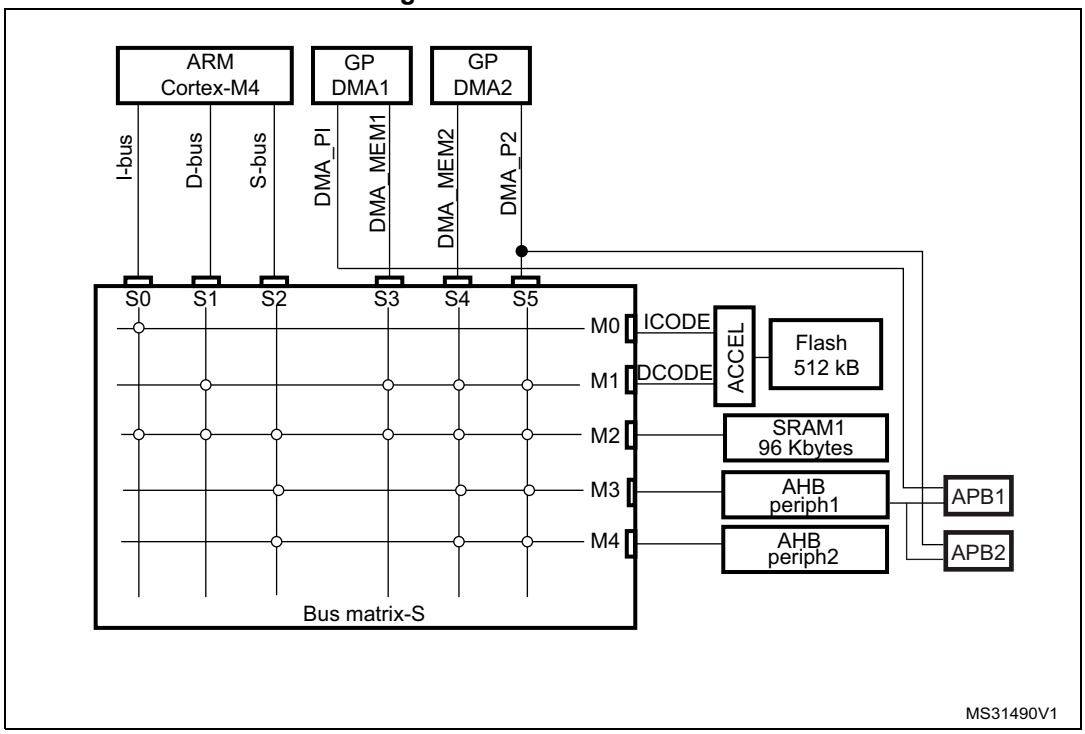

3.8 DMA controller (DMA)

The devices feature two general-purpose dual-port DMAs (DMA1 and DMA2) with 8 streams each. They are able to manage memory-to-memory, peripheral-to-memory and memory-to-peripheral transfers. They feature dedicated FIFOs for APB/AHB peripherals, support burst transfer and are designed to provide the maximum peripheral bandwidth (AHB/APB).

The two DMA controllers support circular buffer management, so that no specific code is needed when the controller reaches the end of the buffer. The two DMA controllers also have a double buffering feature, which automates the use and switching of two memory buffers without requiring any special code.

Each stream is connected to dedicated hardware DMA requests, with support for software trigger on each stream. Configuration is made by software and transfer sizes between source and destination are independent.

The DMA can be used with the main peripherals:

- SPI and I^2S
- I^2C
- USART
- General-purpose, basic and advanced-control timers TIMx
- SD/SDIO/MMC host interface
- ADC

3.9 Nested vectored interrupt controller (NVIC)

The devices embed a nested vectored interrupt controller able to manage 16 priority levels, and handle up to 62 maskable interrupt channels plus the 16 interrupt lines of the Cortex®-M4 with FPU.

- Closely coupled NVIC gives low-latency interrupt processing
- Interrupt entry vector table address passed directly to the core
- Allows early processing of interrupts
- Processing of late arriving, higher-priority interrupts
- Support tail chaining
- Processor state automatically saved
- Interrupt entry restored on interrupt exit with no instruction overhead

This hardware block provides flexible interrupt management features with minimum interrupt latency.

3.10 External interrupt/event controller (EXTI)

The external interrupt/event controller consists of 21 edge-detector lines used to generate interrupt/event requests. Each line can be independently configured to select the trigger event (rising edge, falling edge, both) and can be masked independently. A pending register maintains the status of the interrupt requests. The EXTI can detect an external line with a pulse width shorter than the Internal APB2 clock period. Up to 81 GPIOs can be connected to the 16 external interrupt lines.

3.11 Clocks and startup

On reset the 16 MHz internal RC oscillator is selected as the default CPU clock. The 16 MHz internal RC oscillator is factory-trimmed to offer 1% accuracy at 25 °C. The application can then select as system clock either the RC oscillator or an external 4-26 MHz clock source. This clock can be monitored for failure. If a failure is detected, the system automatically switches back to the internal RC oscillator and a software interrupt is generated (if enabled). This clock source is input to a PLL thus allowing to increase the frequency up to 84 MHz. Similarly, full interrupt management of the PLL clock entry is available when necessary (for example if an indirectly used external oscillator fails).

Several prescalers allow the configuration of the two AHB buses, the high-speed APB (APB2) and the low-speed APB (APB1) domains. The maximum frequency of the two AHB buses is 84 MHz while the maximum frequency of the high-speed APB domains is 84 MHz. The maximum allowed frequency of the low-speed APB domain is 42 MHz.

The devices embed a dedicated PLL (PLLI2S) which allows to achieve audio class performance. In this case, the I^2S master clock can generate all standard sampling frequencies from 8 kHz to 192 kHz.

3.12 Boot modes

At startup, boot pins are used to select one out of three boot options:

- Boot from user Flash
- Boot from system memory
- Boot from embedded SRAM

The boot loader is located in system memory. It is used to reprogram the Flash memory by using either USART1(PA9/10), USART2(PD5/6), USB OTG FS in device mode (PA11/12) through DFU (device firmware upgrade), I2C1(PB6/7), I2C2(PB10/3), I2C3(PA8/PB4), SPI1(PA4/5/6/7), SPI2(PB12/13/14/15) or SPI3(PA15, PC10/11/12).

For more detailed information on the bootloader, refer to Application Note: AN2606, *STM32™ microcontroller system memory boot mode*.

3.13 Power supply schemes

- V_{DD} = 1.7 to 3.6 V: external power supply for I/Os with the internal supervisor (POR/PDR) disabled, provided externally through V_{DD} pins. Requires the use of an external power supply supervisor connected to the VDD and PDR_ON pins.
- V_{DD} = 1.8 to 3.6 V: external power supply for I/Os and the internal regulator (when enabled), provided externally through V_{DD} pins.
- V_{SSA}, V_{DDA} = 1.7 to 3.6 V: external analog power supplies for ADC, Reset blocks, RCs and PLL. V_{DDA} and V_{SSA} must be connected to V_{DD} and V_{SS}, respectively, with decoupling technique.
- V_{BAT} = 1.65 to 3.6 V: power supply for RTC, external clock 32 kHz oscillator and backup registers (through power switch) when V_{DD} is not present.

Refer to *Figure 18: Power supply scheme* for more details.

3.14 Power supply supervisor

3.14.1 Internal reset ON

This feature is available for V_{DD} operating voltage range 1.8 V to 3.6 V.

The internal power supply supervisor is enabled by holding PDR_ON high.

The device has an integrated power-on reset (POR) / power-down reset (PDR) circuitry coupled with a Brownout reset (BOR) circuitry. At power-on, POR is always active, and ensures proper operation starting from 1.8 V. After the 1.8 V POR threshold level is reached, the option byte loading process starts, either to confirm or modify default thresholds, or to disable BOR permanently. Three BOR thresholds are available through option bytes.

The device remains in reset mode when V_{DD} is below a specified threshold, $V_{POR/PDR}$ or V_{BOR}, without the need for an external reset circuit.

The device also features an embedded programmable voltage detector (PVD) that monitors the V_{DD}/V_{DDA} power supply and compares it to the V_{PVD} threshold. An interrupt can be generated when V_{DD}/V_{DDA} drops below the V_{PVD} threshold and/or when V_{DD}/V_{DDA} is higher than the V_{PVD} threshold. The interrupt service routine can then generate a warning message and/or put the MCU into a safe state. The PVD is enabled by software.

3.14.2 Internal reset OFF

This feature is available only on packages featuring the PDR_ON pin. The internal power-on reset (POR) / power-down reset (PDR) circuitry is disabled by setting the PDR_ON pin to low.

An external power supply supervisor should monitor V_{DD} and should maintain the device in reset mode as long as V_{DD} is below a specified threshold. PDR_ON should be connected to this external power supply supervisor. Refer to *Figure 5: Power supply supervisor interconnection with internal reset OFF*.

Figure 5. Power supply supervisor interconnection with internal reset OFF(1)

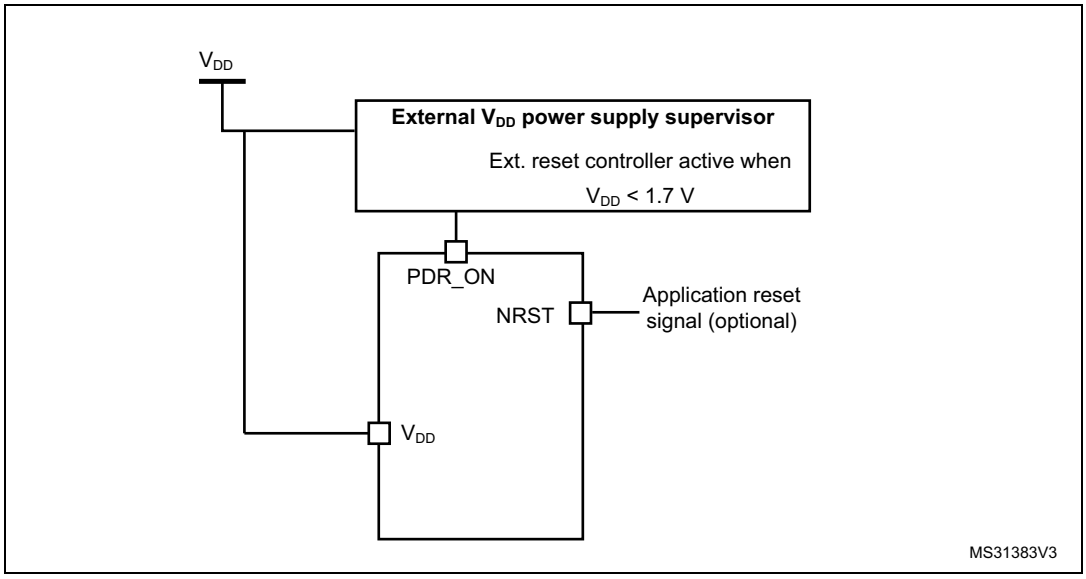

1. The PRD_ON pin is only available in the WLCSP49 and UFBGA100 packages.

The V_{DD} specified threshold, below which the device must be maintained under reset, is 1.7 V (see *Figure 6*).

A comprehensive set of power-saving mode allows to design low-power applications.

When the internal reset is OFF, the following integrated features are no longer supported:

- The integrated power-on reset (POR) / power-down reset (PDR) circuitry is disabled.
- The brownout reset (BOR) circuitry must be disabled.
- The embedded programmable voltage detector (PVD) is disabled.
- V_{BAT} functionality is no more available and VBAT pin should be connected to V_{DD}.

Figure 6. PDR_ON control with internal reset OFF

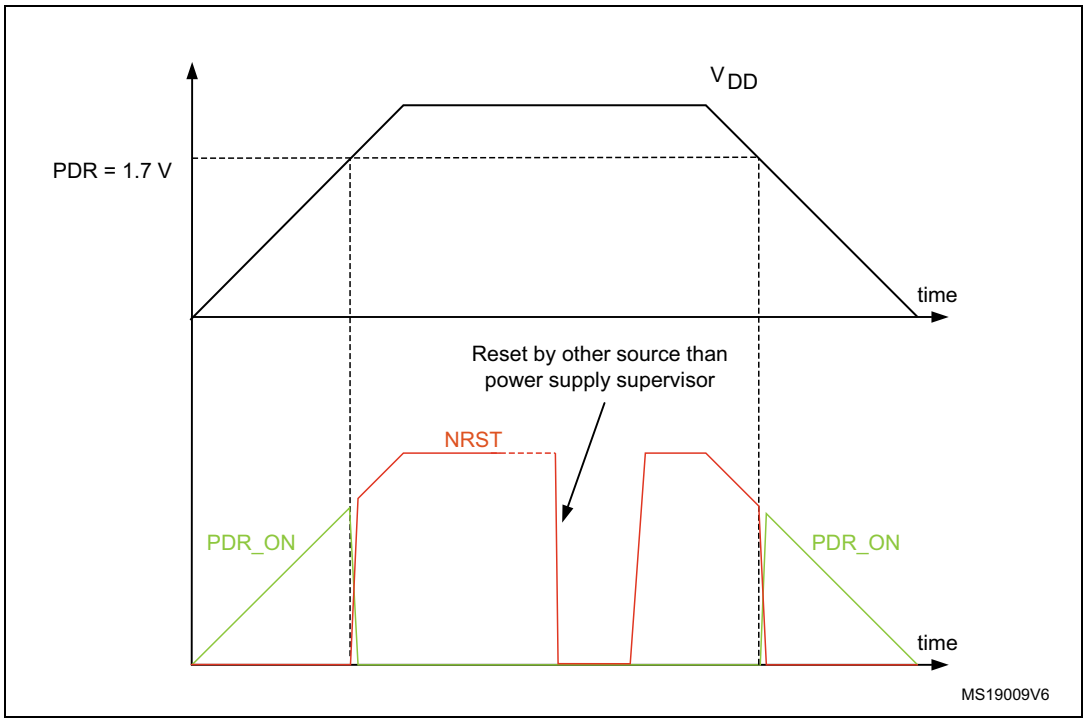

3.15 Voltage regulator

The regulator has four operating modes:

- Regulator ON
  - Main regulator mode (MR)
  - Low power regulator (LPR)
  - Power-down
- Regulator OFF

3.15.1 Regulator ON

On packages embedding the BYPASS_REG pin, the regulator is enabled by holding BYPASS_REG low. On all other packages, the regulator is always enabled.

There are three power modes configured by software when the regulator is ON:

- MR is used in the nominal regulation mode (With different voltage scaling in Run)

  In Main regulator mode (MR mode), different voltage scaling are provided to reach the best compromise between maximum frequency and dynamic power consumption.
- LPR is used in the Stop modes

  The LP regulator mode is configured by software when entering Stop mode.
- Power-down is used in Standby mode.

  The Power-down mode is activated only when entering in Standby mode. The regulator output is in high impedance and the kernel circuitry is powered down, inducing zero consumption. The contents of the registers and SRAM are lost.

Depending on the package, one or two external ceramic capacitors should be connected on the V_{CAP_1} and V_{CAP_2} pins. The V_{CAP_2} pin is only available for the LQFP100 and UFBGA100 packages.

All packages have the regulator ON feature.

3.15.2 Regulator OFF

The Regulator OFF is available only on the UFBGA100, which features the BYPASS_REG pin. The regulator is disabled by holding BYPASS_REG high. The regulator OFF mode allows to supply externally a V12 voltage source through V_{CAP_1} and V_{CAP_2} pins.

Since the internal voltage scaling is not managed internally, the external voltage value must be aligned with the targeted maximum frequency. Refer to *Table 14: General operating conditions*.

The two 2.2 µF V_{CAP} ceramic capacitors should be replaced by two 100 nF decoupling capacitors. Refer to *Figure 18: Power supply scheme*.

When the regulator is OFF, there is no more internal monitoring on V12. An external power supply supervisor should be used to monitor the V12 of the logic power domain. PA0 pin should be used for this purpose, and act as power-on reset on V12 power domain.

In regulator OFF mode, the following features are no more supported:

- PA0 cannot be used as a GPIO pin since it allows to reset a part of the V12 logic power domain which is not reset by the NRST pin.
- As long as PA0 is kept low, the debug mode cannot be used under power-on reset. As a consequence, PA0 and NRST pins must be managed separately if the debug connection under reset or pre-reset is required.

Figure 7. Regulator OFF

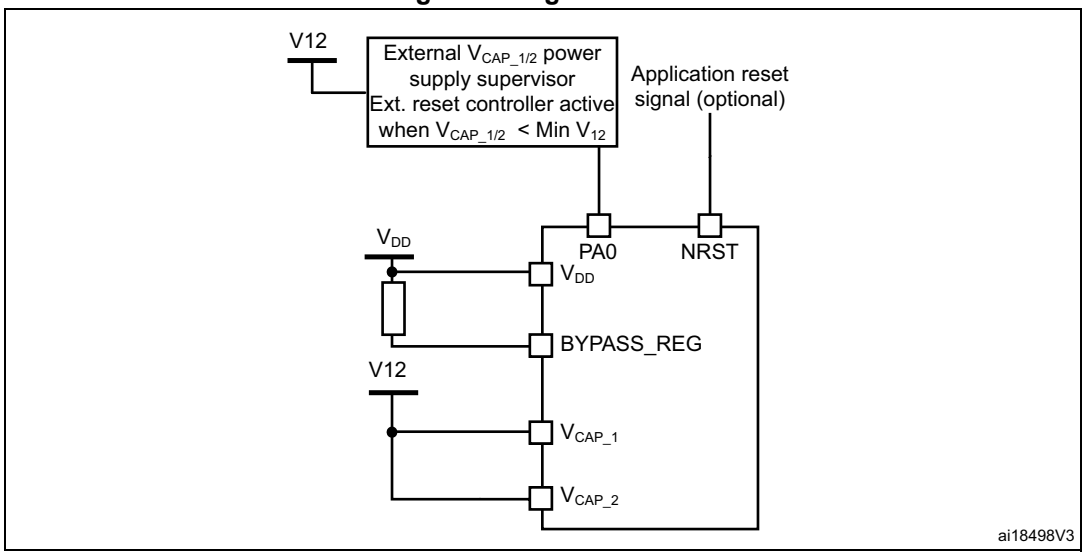

The following conditions must be respected:

- V_{DD} should always be higher than V_{CAP_1} and V_{CAP_2} to avoid current injection between power domains.
- If the time for V_{CAP_1} and V_{CAP_2} to reach V_{12} minimum value is faster than the time for V_{DD} to reach 1.7 V, then PA0 should be kept low to cover both conditions: until V_{CAP_1} and V_{CAP_2} reach V_{12} minimum value and until V_{DD} reaches 1.7 V (see *Figure 8*).
- Otherwise, if the time for V_{CAP_1} and V_{CAP_2} to reach V_{12} minimum value is slower than the time for V_{DD} to reach 1.7 V, then PA0 could be asserted low externally (see *Figure 9*).
- If V_{CAP_1} and V_{CAP_2} go below V_{12} minimum value and V_{DD} is higher than 1.7 V, then a reset must be asserted on PA0 pin.

Note: The minimum value of V_{12} depends on the maximum frequency targeted in the application

Figure 8. Startup in regulator OFF: slow V_{DD} slope - power-down reset risen after V_{CAP_1}/V_{CAP_2} stabilization

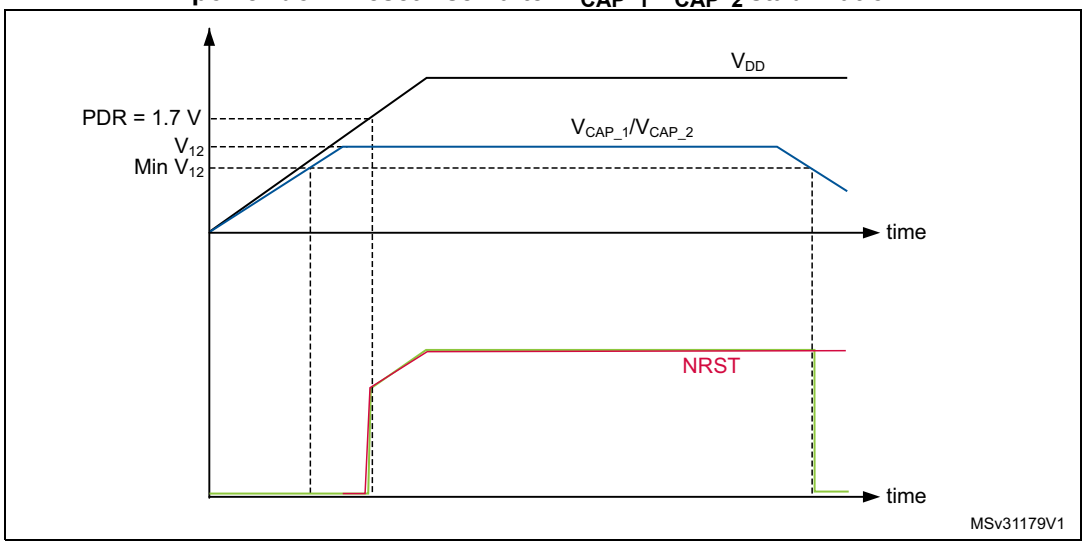

1. This figure is valid whatever the internal reset mode (ON or OFF).

Figure 9. Startup in regulator OFF mode: fast V_{DD} slope - power-down reset risen before V_{CAP_1}/V_{CAP_2} stabilization

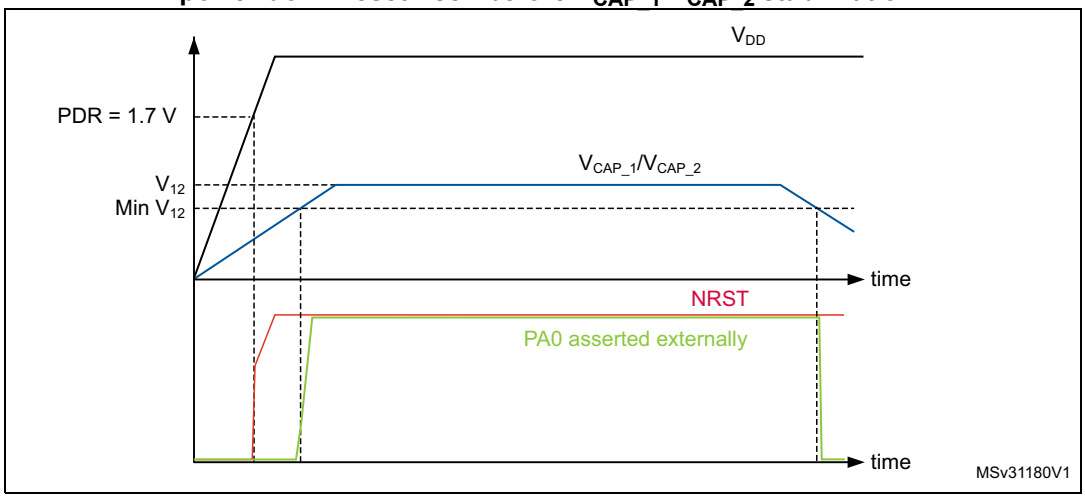

1. This figure is valid whatever the internal reset mode (ON or OFF).

3.15.3 Regulator ON/OFF and internal power supply supervisor availability

Table 3. Regulator ON/OFF and internal power supply supervisor availability

Package	Regulator ON	Regulator OFF	Power supply supervisor ON	Power supply supervisor OFF
UFQFPN48	Yes	No	Yes	No
WLCSP49	Yes	No	Yes PDR_ON set to VDD	Yes PDR_ON external control(1)
LQFP64	Yes	No	Yes	No
LQFP100	Yes	No	Yes	No
UFBGA100	Yes BYPASS_REG set to VSS	Yes BYPASS_REG set to VDD	Yes PDR_ON set to VDD	Yes PDR_ON external control (1)

1. Refer to *Section 3.14: Power supply supervisor*

3.16 Real-time clock (RTC) and backup registers

The backup domain includes:

- The real-time clock (RTC)
- 20 backup registers

The real-time clock (RTC) is an independent BCD timer/counter. Dedicated registers contain the second, minute, hour (in 12/24 hour), week day, date, month, year, in BCD (binary-coded decimal) format. Correction for 28, 29 (leap year), 30, and 31 day of the month are performed automatically. The RTC features a reference clock detection, a more precise second source clock (50 or 60 Hz) can be used to enhance the calendar precision. The RTC provides a programmable alarm and programmable periodic interrupts with wakeup from Stop and Standby modes. The sub-seconds value is also available in binary format.

It is clocked by a 32.768 kHz external crystal, resonator or oscillator, the internal low-power RC oscillator or the high-speed external clock divided by 128. The internal low-speed RC has a typical frequency of 32 kHz. The RTC can be calibrated using an external 512 Hz output to compensate for any natural quartz deviation.

Two alarm registers are used to generate an alarm at a specific time and calendar fields can be independently masked for alarm comparison. To generate a periodic interrupt, a 16-bit programmable binary auto-reload downcounter with programmable resolution is available and allows automatic wakeup and periodic alarms from every 120 µs to every 36 hours.

A 20-bit prescaler is used for the time base clock. It is by default configured to generate a time base of 1 second from a clock at 32.768 kHz.

The backup registers are 32-bit registers used to store 80 bytes of user application data when V_{DD} power is not present. Backup registers are not reset by a system, a power reset, or when the device wakes up from the Standby mode (see *Section 3.17: Low-power modes*).

Additional 32-bit registers contain the programmable alarm subseconds, seconds, minutes, hours, day, and date.

The RTC and backup registers are supplied through a switch that is powered either from the V_{DD} supply when present or from the V_{BAT} pin.

3.17 Low-power modes

The devices support three low-power modes to achieve the best compromise between low power consumption, short startup time and available wakeup sources:

- **Sleep mode**

  In Sleep mode, only the CPU is stopped. All peripherals continue to operate and can wake up the CPU when an interrupt/event occurs.

- **Stop mode**

  The Stop mode achieves the lowest power consumption while retaining the contents of SRAM and registers. All clocks in the 1.2 V domain are stopped, the PLL, the HSI RC and the HSE crystal oscillators are disabled. The voltage regulator can also be put either in normal or in low-power mode.

  The device can be woken up from the Stop mode by any of the EXTI line (the EXTI line source can be one of the 16 external lines, the PVD output, the RTC alarm/ wakeup/ tamper/ time stamp events).

- **Standby mode**

  The Standby mode is used to achieve the lowest power consumption. The internal voltage regulator is switched off so that the entire 1.2 V domain is powered off. The PLL, the HSI RC and the HSE crystal oscillators are also switched off. After entering Standby mode, the SRAM and register contents are lost except for registers in the backup domain when selected.

  The device exits the Standby mode when an external reset (NRST pin), an IWDG reset, a rising edge on the WKUP pin, or an RTC alarm/ wakeup/ tamper/time stamp event occurs.

  Standby mode is not supported when the embedded voltage regulator is bypassed and the 1.2 V domain is controlled by an external power.

3.18 V_{BAT} operation

The VBAT pin allows to power the device V_{BAT} domain from an external battery, an external super-capacitor, or from V_{DD} when no external battery and an external super-capacitor are present.

V_{BAT} operation is activated when V_{DD} is not present.

The VBAT pin supplies the RTC and the backup registers.

Note: When the microcontroller is supplied from VBAT, external interrupts and RTC alarm/events do not exit it from V_{BAT} operation. When PDR_ON pin is not connected to V_{DD} (internal Reset OFF), the V_{BAT} functionality is no more available and VBAT pin should be connected to V_{DD}.

3.19 Timers and watchdogs

The devices embed one advanced-control timer, seven general-purpose timers and two watchdog timers.

All timer counters can be frozen in debug mode.

Table 4 compares the features of the advanced-control and general-purpose timers.

Table 4. Timer feature comparison

Timer type	Timer	Counter resolution	Counter type	Prescaler factor	DMA request generation	Capture/ compare channels	Complementary output	Max. interface clock (MHz)	Max. timer clock (MHz)
Advanced-control	TIM1	16-bit	Up, Down, Up/down	Any integer between 1 and 65536	Yes	4	Yes	84	84
General purpose	TIM2, TIM5	32-bit	Up, Down, Up/down	Any integer between 1 and 65536	Yes	4	No	42	84
	TIM3, TIM4	16-bit	Up, Down, Up/down	Any integer between 1 and 65536	Yes	4	No	42	84
	TIM9	16-bit	Up	Any integer between 1 and 65536	No	2	No	84	84
	TIM10, TIM11	16-bit	Up	Any integer between 1 and 65536	No	1	No	84	84

3.19.1 Advanced-control timers (TIM1)

The advanced-control timer (TIM1) can be seen as three-phase PWM generators multiplexed on 4 independent channels. It has complementary PWM outputs with programmable inserted dead times. It can also be considered as a complete general-purpose timer. Its 4 independent channels can be used for:

- Input capture
- Output compare
- PWM generation (edge- or center-aligned modes)
- One-pulse mode output

If configured as standard 16-bit timers, it has the same features as the general-purpose TIMx timers. If configured as a 16-bit PWM generator, it has full modulation capability (0-100%).

The advanced-control timer can work together with the TIMx timers via the Timer Link feature for synchronization or event chaining.

TIM1 supports independent DMA request generation.

3.19.2 General-purpose timers (TIMx)

There are seven synchronizable general-purpose timers embedded in the STM32F401xD/xE (see *Table 4* for differences).

- **TIM2, TIM3, TIM4, TIM5**

  The STM32F401xD/xE devices are 4 full-featured general-purpose timers: TIM2, TIM5, TIM3, and TIM4.The TIM2 and TIM5 timers are based on a 32-bit auto-reload up/downcounter and a 16-bit prescaler. The TIM3 and TIM4 timers are based on a 16-bit auto-reload up/downcounter and a 16-bit prescaler. They all feature four independent channels for input capture/output compare, PWM or one-pulse mode output. This gives up to 15 input capture/output compare/PWMs.

  The TIM2, TIM3, TIM4, TIM5 general-purpose timers can work together, or with the other general-purpose timers and the advanced-control timers TIM1 and TIM8 via the Timer Link feature for synchronization or event chaining.

  Any of these general-purpose timers can be used to generate PWM outputs.

  TIM2, TIM3, TIM4, TIM5 all have independent DMA request generation. They are capable of handling quadrature (incremental) encoder signals and the digital outputs from 1 to 4 hall-effect sensors.

- **TIM9, TIM10 and TIM11**

  These timers are based on a 16-bit auto-reload upcounter and a 16-bit prescaler. TIM10 and TIM11 feature one independent channel, whereas TIM9 has two independent channels for input capture/output compare, PWM or one-pulse mode output. They can be synchronized with the TIM2, TIM3, TIM4, TIM5 full-featured general-purpose timers. They can also be used as simple time bases.

3.19.3 Independent watchdog

The independent watchdog is based on a 12-bit downcounter and 8-bit prescaler. It is clocked from an independent 32 kHz internal RC and as it operates independently from the main clock, it can operate in Stop and Standby modes. It can be used either as a watchdog to reset the device when a problem occurs, or as a free-running timer for application timeout management. It is hardware- or software-configurable through the option bytes.

3.19.4 Window watchdog

The window watchdog is based on a 7-bit downcounter that can be set as free-running. It can be used as a watchdog to reset the device when a problem occurs. It is clocked from the main clock. It has an early warning interrupt capability and the counter can be frozen in debug mode.

3.19.5 SysTick timer

This timer is dedicated to real-time operating systems, but could also be used as a standard downcounter. It features:

- A 24-bit downcounter
- Autoreload capability
- Maskable system interrupt generation when the counter reaches 0
- Programmable clock source.

3.20 Inter-integrated circuit interface (I^2C)

Up to three I^2C bus interfaces can operate in multimaster and slave modes. They can support the standard (up to 100 kHz) and fast (up to 400 kHz) modes. The I2C bus frequency can be increased up to 1 MHz. For more details about the complete solution, please contact your local ST sales representative.They also support the 7/10-bit addressing mode and the 7-bit dual addressing mode (as slave). A hardware CRC generation/verification is embedded.

They can be served by DMA and they support SMBus 2.0/PMBus.

The devices also include programmable analog and digital noise filters (see *Table 5*).

Table 5. Comparison of I2C analog and digital filters

	Analog filter	Digital filter
Pulse width of suppressed spikes	≥ 50 ns	Programmable length from 1 to 15 I2C peripheral clocks

3.21 Universal synchronous/asynchronous receiver transmitters (USART)

The devices embed three universal synchronous/asynchronous receiver transmitters (USART1, USART2 and USART6).

These three interfaces provide asynchronous communication, IrDA SIR ENDEC support, multiprocessor communication mode, single-wire half-duplex communication mode and have LIN Master/Slave capability. The USART1 and USART6 interfaces are able to communicate at speeds of up to 10.5 Mbit/s. The USART2 interface communicates at up to 5.25 bit/s.

USART1 and USART2 also provide hardware management of the CTS and RTS signals, Smart Card mode (ISO 7816 compliant) and SPI-like communication capability. All interfaces can be served by the DMA controller.

Table 6. USART feature comparison

USART name	Standard features	Modem (RTS/CTS)	LIN	SPI master	irDA	Smartcard (ISO 7816)	Max. baud rate in Mbit/s (oversampling by 16)	Max. baud rate in Mbit/s (oversampling by 8)	APB mapping
USART1	X	X	X	X	X	X	5.25	10.5	APB2 (max. 84 MHz)
USART2	X	X	X	X	X	X	2.62	5.25	APB1 (max. 42 MHz)
USART6	X	N.A	X	X	X	X	5.25	10.5	APB2 (max. 84 MHz)

3.22 Serial peripheral interface (SPI)

The devices feature up to four SPIs in slave and master modes in full-duplex and simplex communication modes. SPI1 and SPI4 can communicate at up to 42 Mbit/s, SPI2 and SPI3 can communicate at up to 21 Mbit/s. The 3-bit prescaler gives 8 master mode frequencies and the frame is configurable to 8 bits or 16 bits. The hardware CRC generation/verification supports basic SD Card/MMC modes. All SPIs can be served by the DMA controller.

The SPI interface can be configured to operate in TI mode for communications in master mode and slave mode.

3.23 Inter-integrated sound (I^2S)

Two standard I^2S interfaces (multiplexed with SPI2 and SPI3) are available. They can be operated in master or slave mode, in full duplex and simplex communication modes and can be configured to operate with a 16-/32-bit resolution as an input or output channel. Audio sampling frequencies from 8 kHz up to 192 kHz are supported. When either or both of the I^2S interfaces is/are configured in master mode, the master clock can be output to the external DAC/CODEC at 256 times the sampling frequency.

All I^2Sx can be served by the DMA controller.

3.24 Audio PLL (PLLI2S)

The devices feature an additional dedicated PLL for audio I^2S application. It allows to achieve error-free I^2S sampling clock accuracy without compromising on the CPU performance.

The PLLI2S configuration can be modified to manage an I^2S sample rate change without disabling the main PLL (PLL) used for the CPU.

The audio PLL can be programmed with very low error to obtain sampling rates ranging from 8 kHz to 192 kHz.

In addition to the audio PLL, a master clock input pin can be used to synchronize the I2S flow with an external PLL (or Codec output).

3.25 Secure digital input/output interface (SDIO)

An SD/SDIO/MMC host interface is available, that supports MultiMediaCard System Specification Version 4.2 in three different databus modes: 1-bit (default), 4-bit and 8-bit.

The interface allows data transfer at up to 48 MHz, and is compliant with the SD Memory Card Specification Version 2.0.

The SDIO Card Specification Version 2.0 is also supported with two different databus modes: 1-bit (default) and 4-bit.

The current version supports only one SD/SDIO/MMC4.2 card at any one time and a stack of MMC4.1 or previous.

In addition to SD/SDIO/MMC, this interface is fully compliant with the CE-ATA digital protocol Rev1.1.

3.26 Universal serial bus on-the-go full-speed (OTG_FS)

The devices embed an USB OTG full-speed device/host/OTG peripheral with integrated transceivers. The USB OTG FS peripheral is compliant with the USB 2.0 specification and with the OTG 1.0 specification. It has software-configurable endpoint setting and supports suspend/resume. The USB OTG full-speed controller requires a dedicated 48 MHz clock that is generated by a PLL connected to the HSE oscillator. The major features are:

- Combined Rx and Tx FIFO size of 320 × 35 bits with dynamic FIFO sizing
- Supports the session request protocol (SRP) and host negotiation protocol (HNP)
- 4 bidirectional endpoints
- 8 host channels with periodic OUT support
- HNP/SNP/IP inside (no need for any external resistor)
- For OTG/Host modes, a power switch is needed in case bus-powered devices are connected

3.27 General-purpose input/outputs (GPIOs)

Each of the GPIO pins can be configured by software as output (push-pull or open-drain, with or without pull-up or pull-down), as input (floating, with or without pull-up or pull-down) or as peripheral alternate function. Most of the GPIO pins are shared with digital or analog alternate functions. All GPIOs are high-current-capable and have speed selection to better manage internal noise, power consumption and electromagnetic emission.

The I/O configuration can be locked if needed by following a specific sequence in order to avoid spurious writing to the I/Os registers.

Fast I/O handling allowing maximum I/O toggling up to 84 MHz.

3.28 Analog-to-digital converter (ADC)

One 12-bit analog-to-digital converter is embedded and shares up to 16 external channels, performing conversions in the single-shot or scan mode. In scan mode, automatic conversion is performed on a selected group of analog inputs.

The ADC can be served by the DMA controller. An analog watchdog feature allows very precise monitoring of the converted voltage of one, some or all selected channels. An interrupt is generated when the converted voltage is outside the programmed thresholds.

To synchronize A/D conversion and timers, the ADCs could be triggered by any of TIM1, TIM2, TIM3, TIM4 or TIM5 timer.

3.29 Temperature sensor

The temperature sensor has to generate a voltage that varies linearly with temperature. The conversion range is between 1.7 V and 3.6 V. The temperature sensor is internally connected to the ADC_IN16 input channel which is used to convert the sensor output voltage into a digital value. Refer to the reference manual for additional information.

As the offset of the temperature sensor varies from chip to chip due to process variation, the internal temperature sensor is mainly suitable for applications that detect temperature changes instead of absolute temperatures. If an accurate temperature reading is needed, then an external temperature sensor part should be used.

3.30 Serial wire JTAG debug port (SWJ-DP)

The ARM SWJ-DP interface is embedded, and is a combined JTAG and serial wire debug port that enables either a serial wire debug or a JTAG probe to be connected to the target.

Debug is performed using 2 pins only instead of 5 required by the JTAG (JTAG pins could be re-use as GPIO with alternate function): the JTAG TMS and TCK pins are shared with SWDIO and SWCLK, respectively, and a specific sequence on the TMS pin is used to switch between JTAG-DP and SW-DP.

3.31 Embedded Trace Macrocell™

The ARM Embedded Trace Macrocell provides a greater visibility of the instruction and data flow inside the CPU core by streaming compressed data at a very high rate from the STM32F401xD/xE through a small number of ETM pins to an external hardware trace port analyzer (TPA) device. The TPA is connected to a host computer using any high-speed channel available. Real-time instruction and data flow activity can be recorded and then formatted for display on the host computer that runs the debugger software. TPA hardware is commercially available from common development tool vendors.

The Embedded Trace Macrocell operates with third party debugger software tools.

4 Pinouts and pin description

Figure 10. STM32F401xD/xE WLCSP49 pinout

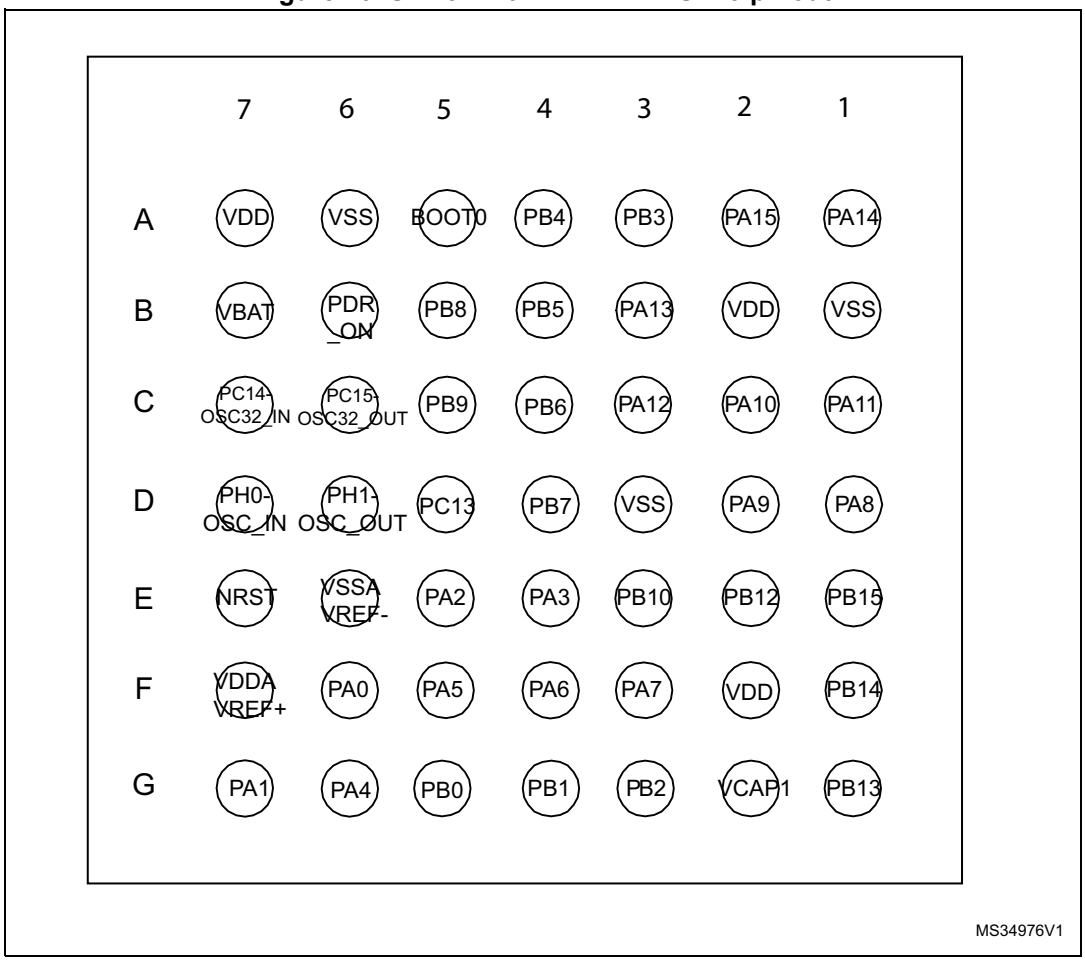

1. The above figure shows the package bump side.

Figure 11. STM32F401xD/xE UFQFPN48 pinout

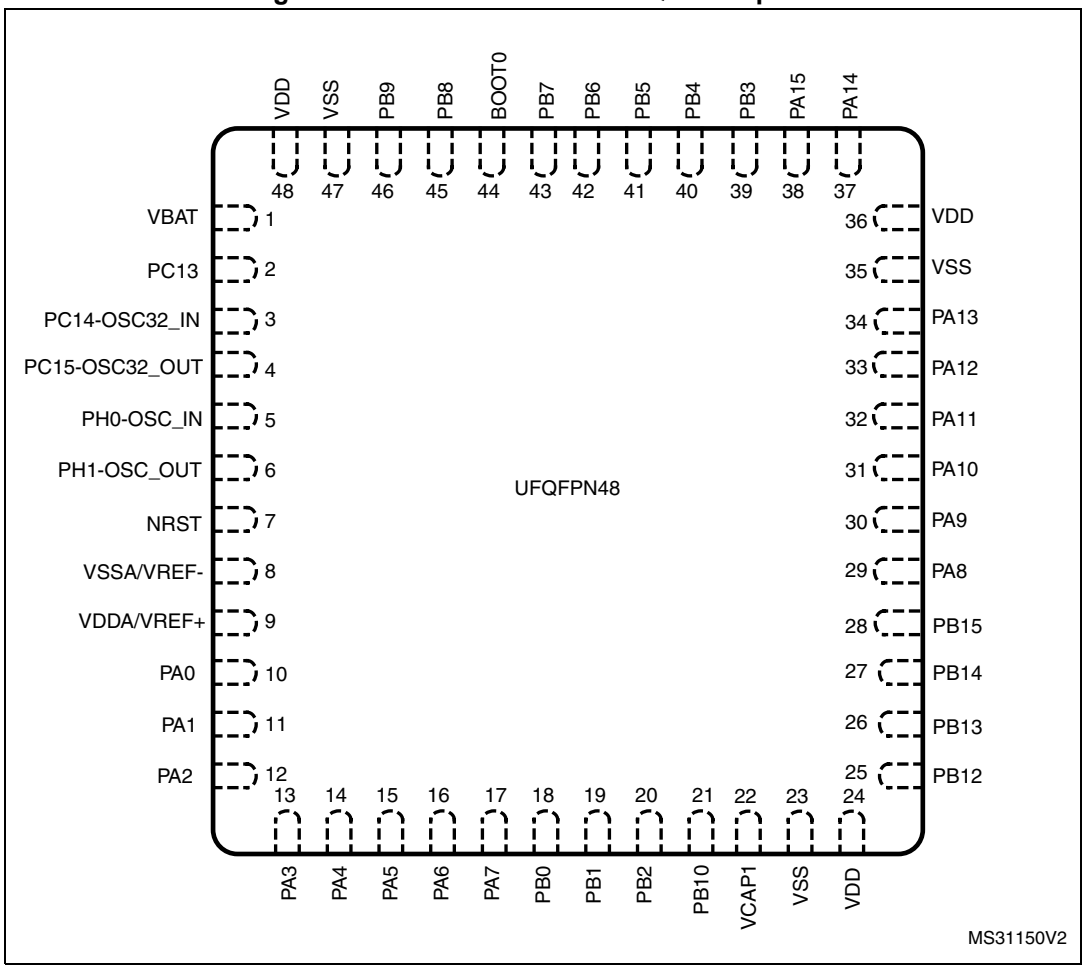

1. The above figure shows the package top view.

Figure 12. STM32F401xD/xE LQFP64 pinout

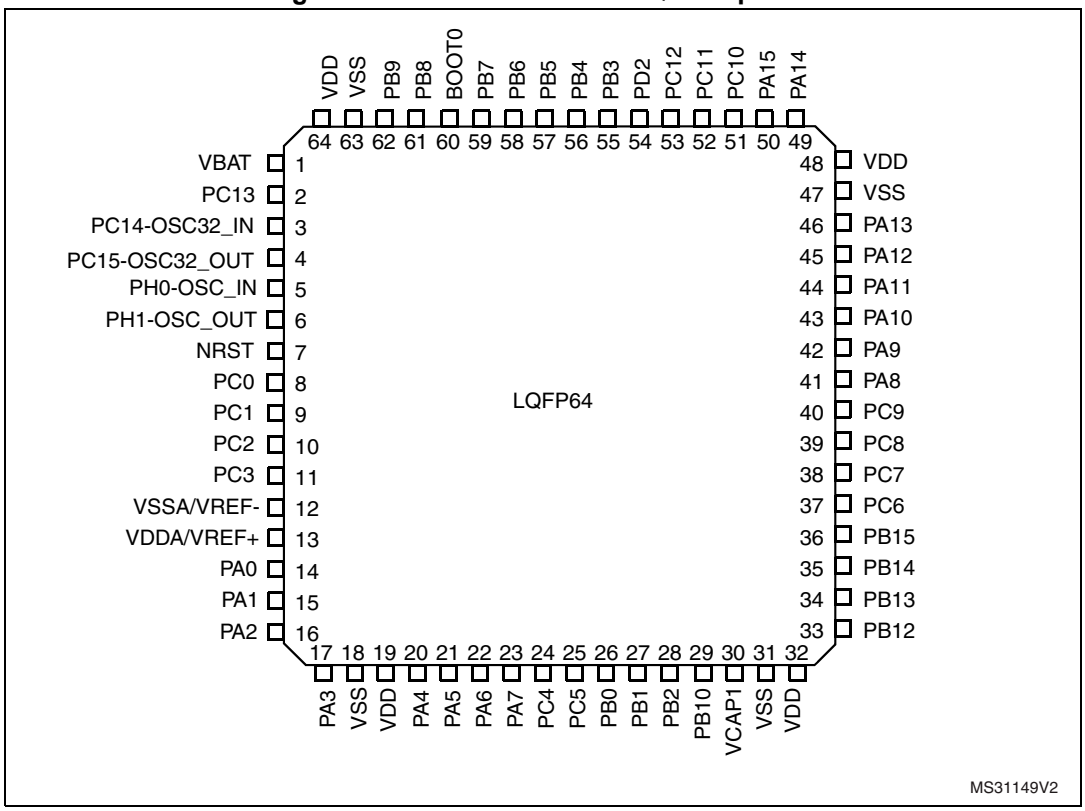

1. The above figure shows the package top view.

Figure 13. STM32F401xD/xE LQFP100 pinout

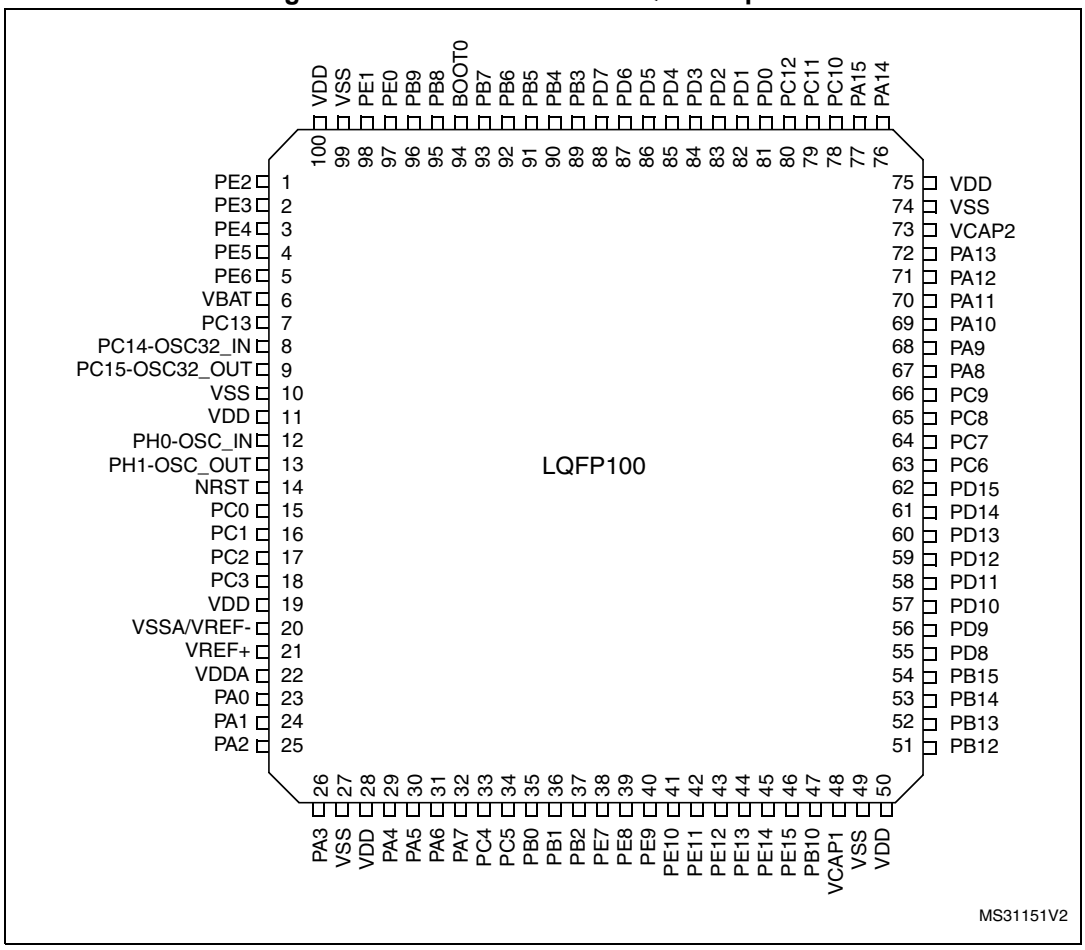

1. The above figure shows the package top view.

Figure 14. STM32F401xD/xE UFBGA100 pinout

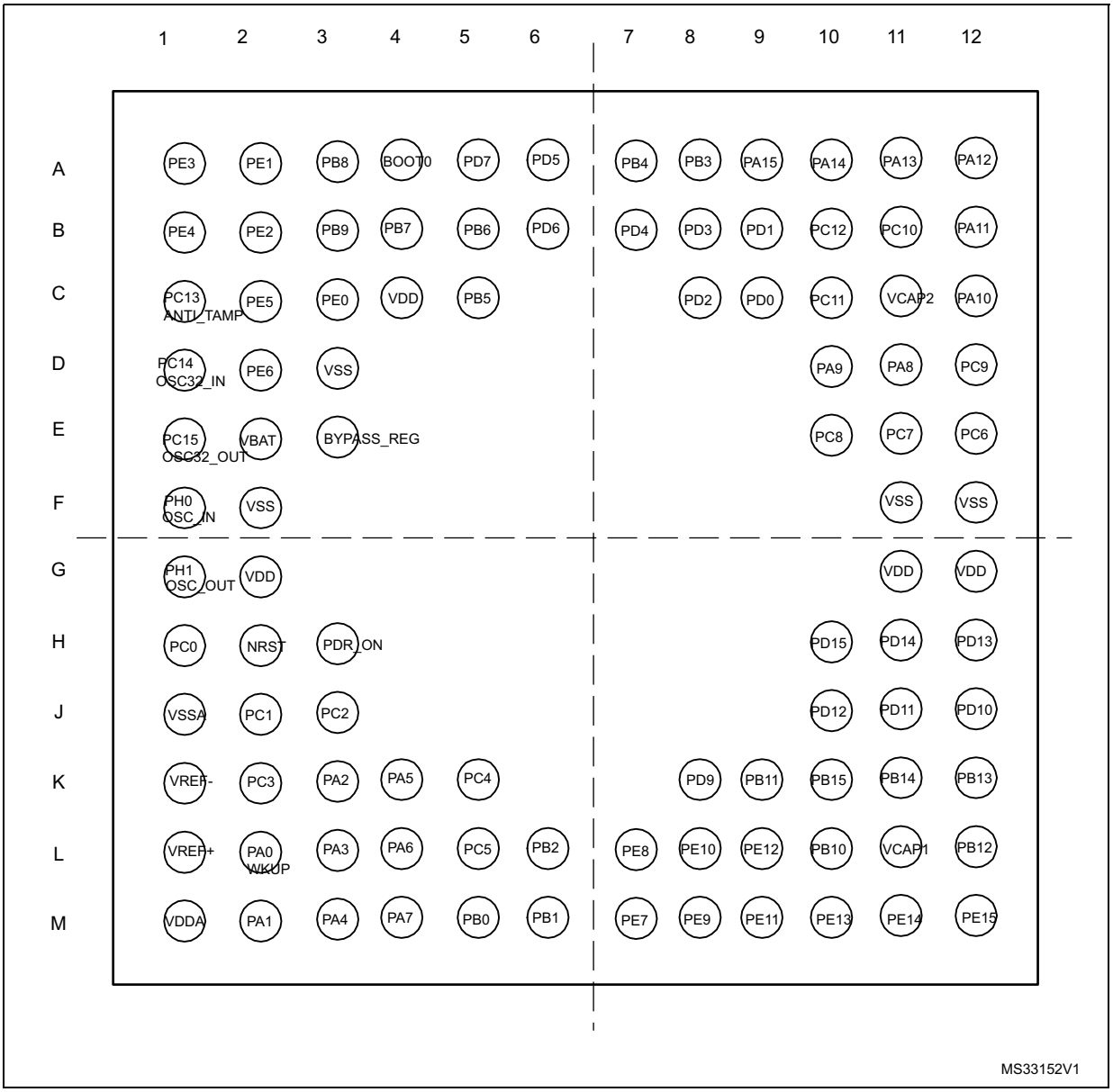

1. This figure shows the package top view

Table 7. Legend/abbreviations used in the pinout table

Name	Abbreviation	Definition
Pin name	Unless otherwise specified in brackets below the pin name, the pin function during and after reset is the same as the actual pin name	
Pin type	S	Supply pin
	I	Input only pin
	I/O	Input/ output pin
I/O structure	FT	5 V tolerant I/O
	B	Dedicated BOOT0 pin
	NRST	Bidirectional reset pin with embedded weak pull-up resistor
Notes	Unless otherwise specified by a note, all I/Os are set as floating inputs during and after reset	
Alternate functions	Functions selected through GPIOx_AFR registers	
Additional functions	Functions directly selected/enabled through peripheral registers	

Table 8. STM32F401xD/xE pin definitions

Pin Number					Pin name (function after reset)(1)	Pin type	I/O structure	Notes	Alternate functions	Additional functions
UQFN48	WLCSP49	LQFP64	LQFP100	UFBGA100						
-	-	-	1	B2	PE2	I/O	FT	-	SPI4_SCK, TRACECLK, EVENTOUT	-
-	-	-	2	A1	PE3	I/O	FT	-	TRACED0, EVENTOUT	-
-	-	-	3	B1	PE4	I/O	FT	-	SPI4_NSS, TRACED1, EVENTOUT	-
-	-	-	4	C2	PE5	I/O	FT	-	SPI4_MISO, TIM9_CH1, TRACED2, EVENTOUT	-
-	-	-	5	D2	PE6	I/O	FT	-	SPI4_MOSI, TIM9_CH2, TRACED3, EVENTOUT	-
-	-	-	-	D3	VSS	S	-	-	-	-
-	-	-	-	C4	VDD	S	-	-	-	-
1	B7	1	6	E2	VBAT	S	-	-	-	-
2	D5	2	7	C1	PC13	I/O	FT	(2) (3)	EVENTOUT,	RTC_TAMP1, RTC_OUT, RTC_TS

Table 8. STM32F401xD/xE pin definitions (continued)

Pin Number					Pin name (function after reset)(1)	Pin type	I/O structure	Notes	Alternate functions	Additional functions
UQFN48	WLCSP49	LQFP64	LQFP100	UFBGA100						
3	C7	3	8	D1	PC14-OSC32_IN (PC14)	I/O	FT	(2) (3) (4)	EVENTOUT	OSC32_IN
4	C6	4	9	E1	PC15-OSC32_OUT (PC15)	I/O	FT	(2) (3) (4)	EVENTOUT	OSC32_OUT
-	-	-	10	F2	VSS	S	-	-	-	-
-	-	-	11	G2	VDD	S	-	-	-	-
5	D7	5	12	F1	PH0-OSC_IN (PH0)	I/O	FT	(4)	EVENTOUT	OSC_IN
6	D6	6	13	G1	PH1-OSC_OUT (PH1)	I/O	FT	(4)	EVENTOUT	OSC_OUT
7	E7	7	14	H2	NRST	I/O	FT	-	EVENTOUT	-
-	-	8	15	H1	PC0	I/O	FT	-	EVENTOUT	ADC1_IN10
-	-	9	16	J2	PC1	I/O	FT	-	EVENTOUT	ADC1_IN11
-	-	10	17	J3	PC2	I/O	FT	-	SPI2_MISO, I2S2ext_SD, EVENTOUT	ADC1_IN12
-	-	11	18	K2	PC3	I/O	FT	-	SPI2_MOSI/I2S2_SD, EVENTOUT	ADC1_IN13
-	-	-	19	-	VDD	S	-	-	-	-
8	E6	12	20	-	VSSA/VREF-	S	-	-	-	-
-	-	-	-	J1	VSSA	S	-	-	-	-
-	-	-	-	K1	VREF-	S	-	-	-	-
9	-	13	-	-	VDDA/VREF+	S	-	-	-	-
-	-	-	21	L1	VREF+	S	-	-	-	-
-	F7	-	22	M1	VDDA	S	-	-	-	-
10	F6	14	23	L2	PA0	I/O	FT	(5)	USART2_CTS, TIM2_CH1/TIM2_ETR, TIM5_CH1, EVENTOUT	ADC1_IN0, WKUP
11	G7	15	24	M2	PA1	I/O	FT	-	USART2_RTS, TIM2_CH2, TIM5_CH2, EVENTOUT	ADC1_IN1
12	E5	16	25	K3	PA2	I/O	FT	-	USART2_TX, TIM2_CH3, TIM5_CH3, TIM9_CH1, EVENTOUT	ADC1_IN2

Table 8. STM32F401xD/xE pin definitions (continued)

Pin Number					Pin name (function after reset)(1)	Pin type	I/O structure	Notes	Alternate functions	Additional functions
UQFN48	WLCSP49	LQFP64	LQFP100	UFBGA100						
13	E4	17	26	L3	PA3	I/O	FT	-	USART2_RX, TIM2_CH4, TIM5_CH4, TIM9_CH2, EVENTOUT	ADC1_IN3
-	-	18	27	-	VSS	S	-	-	-	-
-	-	19	28	-	VDD	S	-	-	-	-
-	-	-	-	E3	BYPASS_ REG	I	FT	-	-	-
14	G6	20	29	M3	PA4	I/O	FT	-	SPI1_NSS, SPI3_NSS/I2S3_WS, USART2_CK, EVENTOUT	ADC1_IN4
15	F5	21	30	K4	PA5	I/O	FT	-	SPI1_SCK, TIM2_CH1/TIM2_ETR, EVENTOUT	ADC1_IN5
16	F4	22	31	L4	PA6	I/O	FT	-	SPI1_MISO, TIM1_BKIN, TIM3_CH1, EVENTOUT	ADC1_IN6
17	F3	23	32	M4	PA7	I/O	FT	-	SPI1_MOSI, TIM1_CH1N, TIM3_CH2, EVENTOUT	ADC1_IN7
-	-	24	33	K5	PC4	I/O	FT	-	EVENTOUT	ADC1_IN14
-	-	25	34	L5	PC5	I/O	FT	-	EVENTOUT	ADC1_IN15
18	G5	26	35	M5	PB0	I/O	FT	-	TIM1_CH2N, TIM3_CH3, EVENTOUT	ADC1_IN8
19	G4	27	36	M6	PB1	I/O	FT	-	TIM1_CH3N, TIM3_CH4, EVENTOUT	ADC1_IN9
20	G3	28	37	L6	PB2	I/O	FT	-	EVENTOUT	BOOT1
-	-	-	38	M7	PE7	I/O	FT	-	TIM1_ETR, EVENTOUT	-
-	-	-	39	L7	PE8	I/O	FT	-	TIM1_CH1N, EVENTOUT	-
-	-	-	40	M8	PE9	I/O	FT	-	TIM1_CH1, EVENTOUT	-
-	-	-	41	L8	PE10	I/O	FT	-	TIM1_CH2N, EVENTOUT	-
-	-	-	42	M9	PE11	I/O	FT	-	SPI4_NSS, TIM1_CH2, EVENTOUT	-
-	-	-	43	L9	PE12	I/O	FT	-	SPI4_SCK, TIM1_CH3N, EVENTOUT	-
-	-	-	44	M10	PE13	I/O	FT	-	SPI4_MISO, TIM1_CH3, EVENTOUT	-

Table 8. STM32F401xD/xE pin definitions (continued)

Pin Number					Pin name (function after reset)(1)	Pin type	I/O structure	Notes	Alternate functions	Additional functions
UQFN48	WLCSP49	LQFP64	LQFP100	UFBGA100						
-	-	-	45	M11	PE14	I/O	FT	-	SPI4_MOSI, TIM1_CH4, EVENTOUT	-
-	-	-	46	M12	PE15	I/O	FT	-	TIM1_BKIN, EVENTOUT	-
21	E3	29	47	L10	PB10	I/O	FT	-	SPI2_SCK/I2S2_CK, I2C2_SCL, TIM2_CH3, EVENTOUT	-
-	-	-	-	K9	PB11	I/O	FT	-	EVENTOUT	-
22	G2	30	48	L11	VCAP1	S	-	-	-	-
23	D3	31	49	F12	VSS	S	-	-	-	-
24	F2	32	50	G12	VDD	S	-	-	-	-
25	E2	33	51	L12	PB12	I/O	FT	-	SPI2_NSS/I2S2_WS, I2C2_SMBA, TIM1_BKIN, EVENTOUT	-
26	G1	34	52	K12	PB13	I/O	FT	-	SPI2_SCK/I2S2_CK, TIM1_CH1N, EVENTOUT	-
27	F1	35	53	K11	PB14	I/O	FT	-	SPI2_MISO, I2S2ext_SD, TIM1_CH2N, EVENTOUT	-
28	E1	36	54	K10	PB15	I/O	FT	-	SPI2_MOSI/I2S2_SD, TIM1_CH3N, EVENTOUT	RTC_REFIN
-	-	-	55	-	PD8	I/O	FT	-	EVENTOUT	-
-	-	-	56	K8	PD9	I/O	FT	-	EVENTOUT	-
-	-	-	57	J12	PD10	I/O	FT	-	EVENTOUT	-
-	-	-	58	J11	PD11	I/O	FT	-	EVENTOUT	-
-	-	-	59	J10	PD12	I/O	FT	-	TIM4_CH1, EVENTOUT	-
-	-	-	60	H12	PD13	I/O	FT	-	TIM4_CH2, EVENTOUT	-
-	-	-	61	H11	PD14	I/O	FT	-	TIM4_CH3, EVENTOUT	-
-	-	-	62	H10	PD15	I/O	FT	-	TIM4_CH4, EVENTOUT	-
-	-	37	63	E12	PC6	I/O	FT	-	I2S2_MCK, USART6_TX, TIM3_CH1, SDIO_D6, EVENTOUT	-
-	-	38	64	E11	PC7	I/O	FT	-	I2S3_MCK, USART6_RX, TIM3_CH2, SDIO_D7, EVENTOUT	-

Table 8. STM32F401xD/xE pin definitions (continued)

Pin Number					Pin name (function after reset)(1)	Pin type	I/O structure	Notes	Alternate functions	Additional functions
UQFN48	WLCSP49	LQFP64	LQFP100	UFBGA100						
-	-	39	65	E10	PC8	I/O	FT	-	USART6_CK, TIM3_CH3, SDIO_D0, EVENTOUT	-
-	-	40	66	D12	PC9	I/O	FT	-	I2S_CKIN, I2C3_SDA, TIM3_CH4, SDIO_D1, MCO_2, EVENTOUT	-
29	D1	41	67	D11	PA8	I/O	FT	-	I2C3_SCL, USART1_CK, TIM1_CH1, OTG_FS_SOF, MCO_1, EVENTOUT	-
30	D2	42	68	D10	PA9	I/O	FT	-	I2C3_SMBA, USART1_TX, TIM1_CH2, EVENTOUT	OTG_FS_VBUS
31	C2	43	69	C12	PA10	I/O	FT	-	USART1_RX, TIM1_CH3, OTG_FS_ID, EVENTOUT	-
32	C1	44	70	B12	PA11	I/O	FT	-	USART1_CTS, USART6_TX, TIM1_CH4, OTG_FS_DM, EVENTOUT	-
33	C3	45	71	A12	PA12	I/O	FT	-	USART1_RTS, USART6_RX, TIM1_ETR, OTG_FS_DP, EVENTOUT	-
34	B3	46	72	A11	PA13 (JTMS-SWDIO)	I/O	FT	-	JTMS-SWDIO, EVENTOUT	-
-	-	-	73	C11	VCAP2	S	-	-	-	-
35	B1	47	74	F11	VSS	S	-	-	-	-
36	-	48	75	G11	VDD	S	-	-	-	-
-	B2	-	-	-	VDD	S	-	-	-	-
37	A1	49	76	A10	PA14 (JTCK-SWCLK)	I/O	FT	-	JTCK-SWCLK, EVENTOUT	-
38	A2	50	77	A9	PA15 (JTDI)	I/O	FT	-	JTDI, SPI1_NSS, SPI3_NSS/I2S3_WS, TIM2_CH1/TIM2_ETR, JTDI, EVENTOUT	-
-	-	51	78	B11	PC10	I/O	FT	-	SPI3_SCK/I2S3_CK, SDIO_D2, EVENTOUT	-
-	-	52	79	C10	PC11	I/O	FT	-	I2S3ext_SD, SPI3_MISO, SDIO_D3, EVENTOUT	-
-	-	53	80	B10	PC12	I/O	FT	-	SPI3_MOSI/I2S3_SD, SDIO_CK, EVENTOUT	-
-	-	-	81	C9	PD0	I/O	FT	-	EVENTOUT	-

Table 8. STM32F401xD/xE pin definitions (continued)

Pin Number					Pin name (function after reset)(1)	Pin type	I/O structure	Notes	Alternate functions	Additional functions
UQFN48	WLCSP49	LQFP64	LQFP100	UFBGA100						
-	-	-	82	B9	PD1	I/O	FT	-	EVENTOUT	-
-	-	54	83	C8	PD2	I/O	FT	-	TIM3_ETR, SDIO_CMD, EVENTOUT	-
-	-	-	84	B8	PD3	I/O	FT	-	SPI2_SCK/I2S2_CK, USART2_CTS, EVENTOUT	-
-	-	-	85	B7	PD4	I/O	FT	-	USART2_RTS, EVENTOUT	-
-	-	-	86	A6	PD5	I/O	FT	-	USART2_TX, EVENTOUT	-
-	-	-	87	B6	PD6	I/O	FT	-	SPI3_MOSI/I2S3_SD, USART2_RX, EVENTOUT	-
-	-	-	88	A5	PD7	I/O	FT	-	USART2_CK, EVENTOUT	-
39	A3	55	89	A8	PB3 (JTDO-SWO)	I/O	FT	-	JTDO-SWO, SPI1_SCK, SPI3_SCK/I2S3_CK, I2C2_SDA, TIM2_CH2, EVENTOUT	-
40	A4	56	90	A7	PB4 (NJTRST)	I/O	FT	-	NJTRST, SPI1_MISO, SPI3_MISO, I2S3ext_SD, I2C3_SDA, TIM3_CH1, EVENTOUT	-
41	B4	57	91	C5	PB5	I/O	FT	-	SPI1_MOSI, SPI3_MOSI/I2S3_SD, I2C1_SMBA, TIM3_CH2, EVENTOUT	-
42	C4	58	92	B5	PB6	I/O	FT	-	I2C1_SCL, USART1_TX, TIM4_CH1, EVENTOUT	-
43	D4	59	93	B4	PB7	I/O	FT	-	I2C1_SDA, USART1_RX, TIM4_CH2, EVENTOUT	-
44	A5	60	94	A4	BOOT0	I	B	-	-	V_{PP}
45	B5	61	95	A3	PB8	I/O	FT	-	I2C1_SCL, TIM4_CH3, TIM10_CH1, SDIO_D4, EVENTOUT	-
46	C5	62	96	B3	PB9	I/O	FT	-	SPI2_NSS/I2S2_WS, I2C1_SDA, TIM4_CH4, TIM11_CH1, SDIO_D5, EVENTOUT	-
-	-	-	97	C3	PE0	I/O	FT	-	TIM4_ETR, EVENTOUT	-
-	-	-	98	A2	PE1	I/O	FT	-	EVENTOUT	-

Table 8. STM32F401xD/xE pin definitions (continued)

Pin Number					Pin name (function after reset)(1)	Pin type	I/O structure	Notes	Alternate functions	Additional functions
UQFN48	WLCSP49	LQFP64	LQFP100	UFBGA100						
47	A6	63	99	-	VSS	S	-	-	-	-
-	B6	-	-	H3	PDR_ON	I	FT	-	-	-
48	A7	64	100	-	VDD	S	-	-	-	-

1. Function availability depends on the chosen device.
2. PC13, PC14 and PC15 are supplied through the power switch. Since the switch only sinks a limited amount of current (3 mA), the use of GPIOs PC13 to PC15 in output mode is limited:
   - The speed should not exceed 2 MHz with a maximum load of 30 pF.
   - These I/Os must not be used as a current source (e.g. to drive an LED).
3. Main function after the first backup domain power-up. Later on, it depends on the contents of the RTC registers even after reset (because these registers are not reset by the main reset). For details on how to manage these I/Os, refer to the RTC register description sections in the STM32F401xx reference manual.
4. FT = 5 V tolerant except when in analog mode or oscillator mode (for PC14, PC15, PH0 and PH1).
5. If the device is delivered in an UFBGA100 and the BYPASS_REG pin is set to VDD (Regulator off/internal reset ON mode), then PA0 is used as an internal Reset (active low)

Table 9. Alternate function mapping

Port		AF00	AF01	AF02	AF03	AF04	AF05	AF06	AF07	AF08	AF09	AF10	AF11	AF12	AF13	AF14	AF15
		SYS_AF	TIM1/TIM2	TIM3/ TIM4/ TIM5	TIM9/ TIM10/ TIM11	I2C1/I2C2/ I2C3	SPI1/SPI2/ I2S2/SPI3/ I2S3/SPI4	SPI2/I2S2/ SPI3/ I2S3	SPI3/I2S3/ USART1/ USART2	USART6	I2C2/ I2C3	OTG1_FS		SDIO			
Port A	PA0	-	TIM2_CH1/ TIM2_ETR	TIM5_CH1	-	-	-	-	USART2_ CTS	-	-	-	-	-	-	-	EVENT OUT
	PA1	-	TIM2_CH2	TIM5_CH2	-	-	-	-	USART2_ RTS	-	-	-	-	-	-	-	EVENT OUT
	PA2	-	TIM2_CH3	TIM5_CH3	TIM9_CH1	-	-	-	USART2_ TX	-	-	-	-	-	-	-	EVENT OUT
	PA3	-	TIM2_CH4	TIM5_CH4	TIM9_CH2	-		-	USART2_ RX	-	-	-	-	-	-	-	EVENT OUT
	PA4	-	-	-	-	-	SPI1_NSS	SPI3_NSS/ I2S3_WS	USART2_ CK	-	-	-	-	-	-	-	EVENT OUT
	PA5	-	TIM2_CH1/ TIM2_ETR	-	-	-	SPI1_SCK	-	-	-	-	-	-	-	-	-	EVENT OUT
	PA6	-	TIM1_BKIN	TIM3_CH1	-	-	SPI1_ MISO	-	-	-	-	-	-	-	-	-	EVENT OUT
	PA7	-	TIM1_CH1N	TIM3_CH2	-	-	SPI1_ MOSI	-	-	-	-	-	-	-	-	-	EVENT OUT
	PA8	MCO_1	TIM1_CH1	-	-	I2C3_SCL	-	-	USART1_ CK	-	-	OTG_FS_ SOF	-	-	-	-	EVENT OUT
	PA9	-	TIM1_CH2	-	-	I2C3_ SMBA	-	-	USART1_ TX	-	-	OTG_FS_ VBUS	-	-	--	-	EVENT OUT
	PA10	-	TIM1_CH3	-	-	-	-	-	USART1_ RX	-	-	OTG_FS_I D	-	-	-	-	EVENT OUT
	PA11	-	TIM1_CH4	-	-	-	-	-	USART1_ CTS	USART6_ TX	-	OTG_FS_ DM	-	-	-	-	EVENT OUT
	PA12	-	TIM1_ETR	-	-	-	-	-	USART1_ RTS	USART6_ RX	-	OTG_FS_ DP	-	-	-	-	EVENT OUT
	PA13	JTMS_ SWDIO	-	-	-	-	-	-	-	-	-	-	-	-	-	-	EVENT OUT
	PA14	JTCK_ SWCLK	-	-	-	-	-	-	-	-	-	-	-	-	-	-	EVENT OUT
	PA15	JTDI	TIM2_CH1/ TIM2_ETR	-	-	-	SPI1_NSS	SPI3_NSS/ I2S3_WS	-	-	-	-	-	-	-	-	EVENT OUT

Table 9. Alternate function mapping (continued)

Port		AF00	AF01	AF02	AF03	AF04	AF05	AF06	AF07	AF08	AF09	AF10	AF11	AF12	AF13	AF14	AF15
		SYS_AF	TIM1/TIM2	TIM3/ TIM4/ TIM5	TIM9/ TIM10/ TIM11	I2C1/I2C2/ I2C3	SPI1/SPI2/ I2S2/SPI3/ I2S3/SPI4	SPI2/I2S2/ SPI3/ I2S3	SPI3/I2S3/ USART1/ USART2	USART6	I2C2/ I2C3	OTG1_FS		SDIO			
Port B	PB0	-	TIM1_CH2N	TIM3_CH3	-	-	-	-	-	-	-	-	-	-	-	-	EVENT OUT
	PB1	-	TIM1_CH3N	TIM3_CH4	-	-	-	-	-	-	-	-	-	-	-	-	EVENT OUT
	PB2	-	-	-	-	-	-	-	-	-	-	-	-	-	-	-	EVENT OUT
	PB3	JTDO-SWO	TIM2_CH2	-	-	-	SPI1_SCK	SPI3_SCK/ I2S3_CK	-	-	I2C2_SDA	-	-	-	-	-	EVENT OUT
	PB4	JTRST	-	TIM3_CH1	-	-	SPI1_ MISO	SPI3_MISO	I2S3ext_S D	-	I2C3_SDA	-	-	-	-	-	EVENT OUT
	PB5	-	-	TIM3_CH2	-	I2C1_ SMBA	SPI1 _MOSI	SPI3_MOSI/ I2S3_SD	-	-	-	-	-	-	-	-	EVENT OUT
	PB6	-	-	TIM4_CH1	-	I2C1_SCL	-	-	USART1_ TX	-	-	-	-	-	-	-	EVENT OUT
	PB7	-	-	TIM4_CH2	-	I2C1_SDA	-	-	USART1_ RX	-	-	-	-	-	-	-	EVENT OUT
	PB8	-	-	TIM4_CH3	TIM10_CH1	I2C1_SCL	-	-	-	-	-	-	-	SDIO_ D4	-	-	EVENT OUT
	PB9	-	-	TIM4_CH4	TIM11_CH1	I2C1_SDA	SPI2_NSS/I 2S2_WS	-	-	-	-	-	-	SDIO_ D5	-	-	EVENT OUT
	PB10	-	TIM2_CH3	-	-	I2C2_SCL	SPI2_SCK/I 2S2_CK	-	-	-	-	-	-	-	-	-	EVENT OUT
	PB12	-	TIM1_BKIN	-	-	I2C2_ SMBA	SPI2_NSS/I 2S2_WS	-	-	-	-	-	-	-	-	-	EVENT OUT
	PB13	-	TIM1_CH1N	-	-	-	SPI2_SCK/I 2S2_CK	-	-	-	-	-	-	-	-	-	EVENT OUT
	PB14	-	TIM1_CH2N	-	-	-	SPI2_MISO	I2S2ext_SD	-	-	-	-	-	-	-	-	EVENT OUT
	PB15	RTC_ REFN	TIM1_CH3N	-	-	-	SPI2_MOSI /I2S2_SD	-	-	-	-	-	-	-	-	-	EVENT OUT

Table 9. Alternate function mapping (continued)

Port		AF00	AF01	AF02	AF03	AF04	AF05	AF06	AF07	AF08	AF09	AF10	AF11	AF12	AF13	AF14	AF15
		SYS_AF	TIM1/TIM2	TIM3/ TIM4/ TIM5	TIM9/ TIM10/ TIM11	I2C1/I2C2/ I2C3	SPI1/SPI2/ I2S2/SPI3/ I2S3/SPI4	SPI2/I2S2/ SPI3/ I2S3	SPI3/I2S3/ USART1/ USART2	USART6	I2C2/ I2C3	OTG1_FS		SDIO			
Port C	PC0	-	-	-	-	-	-	-	-	-	-	-	-	-	-	-	EVENT OUT
	PC1	-	-	-	-	-	-	-	-	-	-	-	-	-	-	-	EVENT OUT
	PC2	-	-	-	-	-	SPI2_ MISO	I2S2ext_SD	-	-	-	-	-	-	-	-	EVENT OUT
	PC3	-	-	-	-	-	SPI2_MOSI /I2S2_SD	-	-	-	-	-	-	-	-	-	EVENT OUT
	PC4	-	-	-	-	-	-	-	-	-	-	-	-	-	-	-	EVENT OUT
	PC5	-	-	-	-	-	-	-	-	-	-	-	-	-	-	-	EVENT OUT
	PC6	-	--	TIM3_CH1	-	-	I2S2_MCK	-	-	USART6_ TX	-	-	-	SDIO_ D6	-	-	EVENT OUT
	PC7	-		TIM3_CH2	-	-	-	I2S3_MCK	-	USART6_ RX	-	-	-	SDIO_ D7	-	-	EVENT OUT
	PC8	-	-	TIM3_CH3	-	-	-	-	-	USART6_ CK	-	-	-	SDIO_ D0	-	-	EVENT OUT
	PC9	MCO_2	-	TIM3_CH4	-	I2C3_SDA	I2S_CKIN	-	-	-	-	-	-	SDIO_ D1	-	-	EVENT OUT
	PC10	-	-	-	-	-	-	SPI3_SCK/ I2S3_CK	-	-	-	-	-	SDIO_ D2	-	-	EVENT OUT
	PC11	-	-	-	-	-	I2S3ext_ SD	SPI3_MISO	-	-	-	-	-	SDIO_ D3	-	-	EVENT OUT
	PC12	-	-	-	-	-	-	SPI3_MOSI/ I2S3_SD	-	-	-	-	-	SDIO_ CK	-	-	EVENT OUT
	PC13	-	-	-	-	-	-	-	-	-	-	-	-	-	-	-	EVENT OUT
	PC14	-	-	-	-	-	-	-	-	-	-	-	-	-	-	-	EVENT OUT
	PC15	-	-	-	-	-	-	-	-	-	-	-	-	-	-	-	EVENT OUT

Table 9. Alternate function mapping (continued)

Port		AF00	AF01	AF02	AF03	AF04	AF05	AF06	AF07	AF08	AF09	AF10	AF11	AF12	AF13	AF14	AF15
		SYS_AF	TIM1/TIM2	TIM3/ TIM4/ TIM5	TIM9/ TIM10/ TIM11	I2C1/I2C2/ I2C3	SPI1/SPI2/ I2S2/SPI3/ I2S3/SPI4	SPI2/I2S2/ SPI3/ I2S3	SPI3/I2S3/ USART1/ USART2	USART6	I2C2/ I2C3	OTG1_FS		SDIO			
Port D	PD0	-	-	-	-	-	-	-	-	-	-	-	-	-	-	-	EVENT OUT
	PD1	-	-	-	-	-	-	-	-	-	-	-	-	-	-	-	EVENT OUT
	PD2	-	-	TIM3_ETR	-	-	-	-	-	-	-	-	-	SDIO_ CMD	-	-	EVENT OUT
	PD3	-	-	-	-	-	SPI2_SCK/ I2S2_CK	-	USART2_ CTS	--	-	-	-	-	-	-	EVENT OUT
	PD4	-	-	-	-	-	-	-	USART2_ RTS		-	-	-	-	-	-	EVENT OUT
	PD5	-	-	-	-	-	-	-	USART2_ TX	-	-	-	-	-	-	-	EVENT OUT
	PD6	-	-	-	-	-	SPI3_MOSI /I2S3_SD	-	USART2_ RX	-	-	-	-	-	-	-	EVENT OUT
	PD7	-	-	-	-	-	-	-	USART2_ CK	-	-	-	-	-	-	-	EVENT OUT
	PD8	-	-	-	-	-	-	-	-	-	-	-	-	-	-	-	EVENT OUT
	PD9	-	-	-	-	-	-	-	-	-	-	-	-	-	-	-	EVENT OUT
	PD10	-	-	-	-	-	-	-	-	-	-	-	-	-	-	-	EVENT OUT
	PD11	-	-	-	-	-	-	-	-	-	-	-	-	-	-	-	EVENT OUT
	PD12	-	-	TIM4_CH1	-	-	-	-	-	-	-	-	-	-	-	-	EVENT OUT
	PD13	-	-	TIM4_CH2	-	-	-	-	-	-	-	-	-	-	-	-	EVENT OUT
	PD14	-	-	TIM4_CH3	-	-	-	-	-	-	-	-	-	-	-	-	EVENT OUT
	PD15	-	-	TIM4_CH4	-	-	-	-	-	-	-	-	-	-	-	-	EVENT OUT

Table 9. Alternate function mapping (continued)

Port		AF00	AF01	AF02	AF03	AF04	AF05	AF06	AF07	AF08	AF09	AF10	AF11	AF12	AF13	AF14	AF15
		SYS_AF	TIM1/TIM2	TIM3/ TIM4/ TIM5	TIM9/ TIM10/ TIM11	I2C1/I2C2/ I2C3	SPI1/SPI2/ I2S2/SPI3/ I2S3/SPI4	SPI2/I2S2/ SPI3/ I2S3	SPI3/I2S3/ USART1/ USART2	USART6	I2C2/ I2C3	OTG1_FS		SDIO			
Port E	PE0	-	-	TIM4_ETR	-	-	-	-	-	-	-	-	-	-	-	-	EVENT OUT
	PE1	-	TIM1_CH2N	-	-	-	-	-	-	-	-	-	-	-	-	-	EVENT OUT
	PE2	TRACECL K	-	-	-	-	SPI4_SCK	-	-	-	-	-	-	-	-	-	EVENT OUT
	PE3	TRACED0	-	-	-	-	-	-	-	-	-	-	-	-	-	-	EVENT OUT
	PE4	TRACED1	-	-	-	-	SPI4_NSS	-	-	-	-	-	-	-	-	-	EVENT OUT
	PE5	TRACED2	-	-	TIM9_CH1	-	SPI4_MISO	-	-	-	-	-	-	-	-	-	EVENT OUT
	PE6	TRACED3	-	-	TIM9_CH2	-	SPI4_MOSI	-	-	-	-	-	-	-	-	-	EVENT OUT
	PE7	-	TIM1_ETR	-	-	-	-	-	-	-	-	-	-	-	-	-	EVENT OUT
	PE8	-	TIM1_CH1N	-	-	-	-	-	-	-	-	-	-	-	-	-	EVENT OUT
	PE9	-	TIM1_CH1	-	-	-	-	-	-	-	-	-	-	-	-	-	EVENT OUT
	PE10	-	TIM1_CH2N	-	-	-	-	-	-	-	-	-	-	-	-	-	EVENT OUT
	PE11	-	TIM1_CH2	-	-	-	SPI4_NSS	-	-	-	-	-	-	-	-	-	EVENT OUT
	PE12	-	TIM1_CH3N	-	-	-	SPI4_SCK	-	-	-	-	-	-	-	-	-	EVENT OUT
	PE13	-	TIM1_CH3	-	-	-	SPI4_MISO	-	-	-	-	-	-	-	-	-	EVENT OUT
	PE14	-	TIM1_CH4	-	-	-	SPI4_MOSI	-	-	-	-	-	-	-	-	-	EVENT OUT
	PE15	-	TIM1_BKIN	-	-	-	-	-	-	-	-	-	-	-	-	-	EVENT OUT

Table 9. Alternate function mapping (continued)

Port		AF00	AF01	AF02	AF03	AF04	AF05	AF06	AF07	AF08	AF09	AF10	AF11	AF12	AF13	AF14	AF15
		SYS_AF	TIM1/TIM2	TIM3/ TIM4/ TIM5	TIM9/ TIM10/ TIM11	I2C1/I2C2/ I2C3	SPI1/SPI2/ I2S2/SPI3/ I2S3/SPI4	SPI2/I2S2/ SPI3/ I2S3	SPI3/I2S3/ USART1/ USART2	USART6	I2C2/ I2C3	OTG1_FS		SDIO			
Port H	PH0	-	-	-	-	-	-	-	-	-	-	-	-	-	-	-	EVENT OUT
	PH1	-	-	-	-	-	-	-	-	-	-	-	-	-	-	-	EVENT OUT

5 Memory mapping

The memory map is shown in *Figure 15*.

Figure 15. Memory map

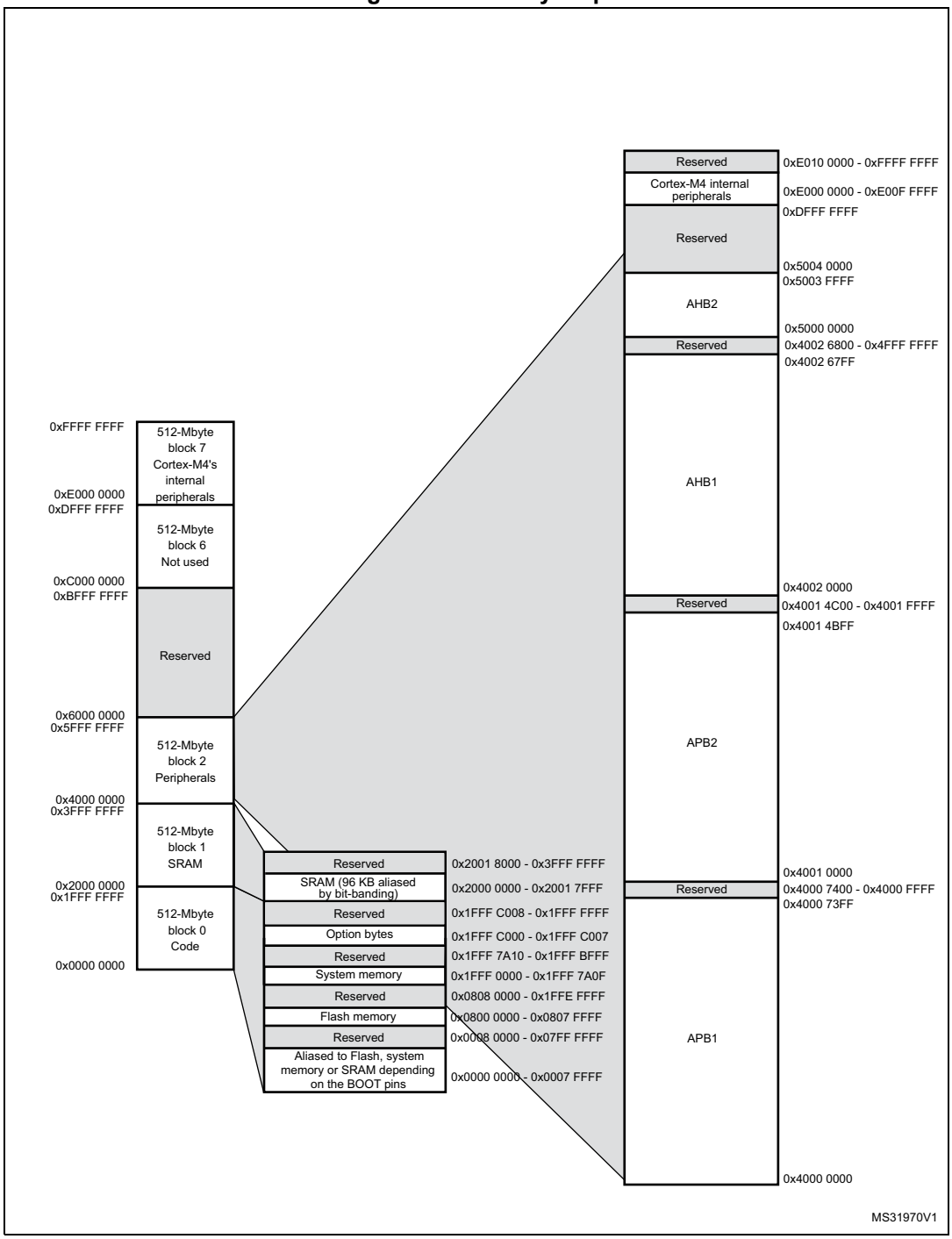

Table 10. STM32F401xD register boundary addresses

Bus	Boundary address	Peripheral
	0xE010 0000 - 0xFFFF FFFF	Reserved
Cortex®-M4	0xE000 0000 - 0xE00F FFFF	Cortex-M4 internal peripherals
	0x5004 0000 - 0xDFFF FFFF	Reserved
AHB2	0x5000 0000 - 0x5003 FFFF	USB OTG FS
AHB1	0x4002 6800 - 0x4FFF FFFF	Reserved
	0x4002 6400 - 0x4002 67FF	DMA2
	0x4002 6000 - 0x4002 63FF	DMA1
	0x4002 5000 - 0x4002 4FFF	Reserved
	0x4002 3C00 - 0x4002 3FFF	Flash interface register
	0x4002 3800 - 0x4002 3BFF	RCC
	0x4002 3400 - 0x4002 37FF	Reserved
	0x4002 3000 - 0x4002 33FF	CRC
	0x4002 2000 - 0x4002 2FFF	Reserved
	0x4002 1C00 - 0x4002 1FFF	GPIOH
	0x4002 1400 - 0x4002 1BFF	Reserved
	0x4002 1000 - 0x4002 13FF	GPIOE
	0x4002 0C00 - 0x4002 0FFF	GPIOD
	0x4002 0800 - 0x4002 0BFF	GPIOC
	0x4002 0400 - 0x4002 07FF	GPIOB
	0x4002 0000 - 0x4002 03FF	GPIOA

Table 10. STM32F401xD register boundary addresses (continued)

Bus	Boundary address	Peripheral
APB2	0x4001 4C00- 0x4001 FFFF	Reserved
	0x4001 4800 - 0x4001 4BFF	TIM11
	0x4001 4400 - 0x4001 47FF	TIM10
	0x4001 4000 - 0x4001 43FF	TIM9
	0x4001 3C00 - 0x4001 3FFF	EXTI
	0x4001 3800 - 0x4001 3BFF	SYSCFG
	0x4001 3400 - 0x4001 37FF	SPI4/I2S4
	0x4001 3000 - 0x4001 33FF	SPI1
	0x4001 2C00 - 0x4001 2FFF	SDIO
	0x4001 2400 - 0x4001 2BFF	Reserved
	0x4001 2000 - 0x4001 23FF	ADC1
	0x4001 1800 - 0x4001 1FFF	Reserved
	0x4001 1400 - 0x4001 17FF	USART6
	0x4001 1000 - 0x4001 13FF	USART1
	0x4001 0800 - 0x4001 0FFF	Reserved
	0x4001 0400 - 0x4001 07FF	TIM8
	0x4001 0000 - 0x4001 03FF	TIM1
	0x4000 7400 - 0x4000 FFFF	Reserved

Table 10. STM32F401xD register boundary addresses (continued)

Bus	Boundary address	Peripheral
APB1	0x4000 7000 - 0x4000 73FF	PWR
	0x4000 6000 - 0x4000 6FFF	Reserved
	0x4000 5C00 - 0x4000 5FFF	I2C3
	0x4000 5800 - 0x4000 5BFF	I2C2
	0x4000 5400 - 0x4000 57FF	I2C1
	0x4000 4800 - 0x4000 53FF	Reserved
	0x4000 4400 - 0x4000 47FF	USART2
	0x4000 4000 - 0x4000 43FF	I2S3ext
	0x4000 3C00 - 0x4000 3FFF	SPI3 / I2S3
	0x4000 3800 - 0x4000 3BFF	SPI2 / I2S2
	0x4000 3400 - 0x4000 37FF	I2S2ext
	0x4000 3000 - 0x4000 33FF	IWDG
	0x4000 2C00 - 0x4000 2FFF	WWDG
	0x4000 2800 - 0x4000 2BFF	RTC & BKP Registers
	0x4000 1000 - 0x4000 27FF	Reserved
	0x4000 0C00 - 0x4000 0FFF	TIM5
	0x4000 0800 - 0x4000 0BFF	TIM4
	0x4000 0400 - 0x4000 07FF	TIM3
	0x4000 0000 - 0x4000 03FF	TIM2

6 Electrical characteristics

6.1 Parameter conditions

Unless otherwise specified, all voltages are referenced to V_{SS}.

6.1.1 Minimum and maximum values

Unless otherwise specified the minimum and maximum values are guaranteed in the worst conditions of ambient temperature, supply voltage and frequencies by tests in production on 100% of the devices with an ambient temperature at T_A = 25 °C and T_A = $T_A$max (given by the selected temperature range).

Data based on characterization results, design simulation and/or technology characteristics are indicated in the table footnotes and are not tested in production. Based on characterization, the minimum and maximum values refer to sample tests and represent the mean value plus or minus three times the standard deviation (mean ±3 σ).

6.1.2 Typical values

Unless otherwise specified, typical data are based on T_A = 25 °C, V_{DD} = 3.3 V (for the 1.7 V ≤ V_{DD} ≤ 3.6 V voltage range). They are given only as design guidelines and are not tested.

Typical ADC accuracy values are determined by characterization of a batch of samples from a standard diffusion lot over the full temperature range, where 95% of the devices have an error less than or equal to the value indicated (mean ±2 σ).

6.1.3 Typical curves

Unless otherwise specified, all typical curves are given only as design guidelines and are not tested.

6.1.4 Loading capacitor

The loading conditions used for pin parameter measurement are shown in *Figure 16*.

Figure 16. Pin loading conditions

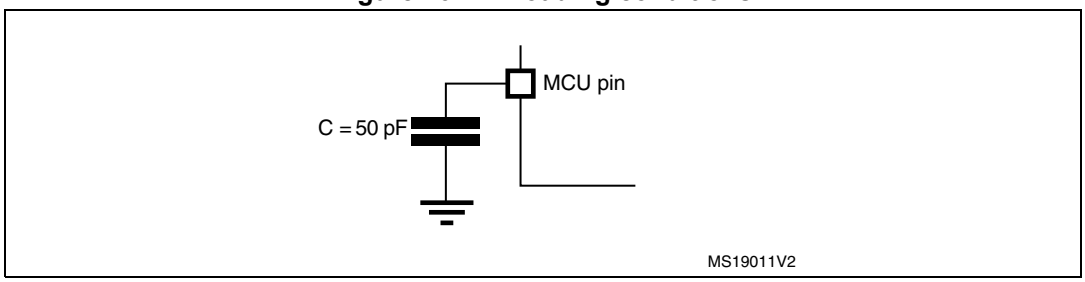

6.1.5 Pin input voltage

The input voltage measurement on a pin of the device is described in *Figure 17*.

Figure 17. Input voltage measurement

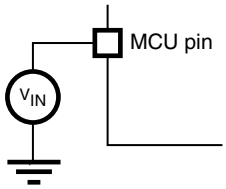

6.1.6 Power supply scheme

Figure 18. Power supply scheme

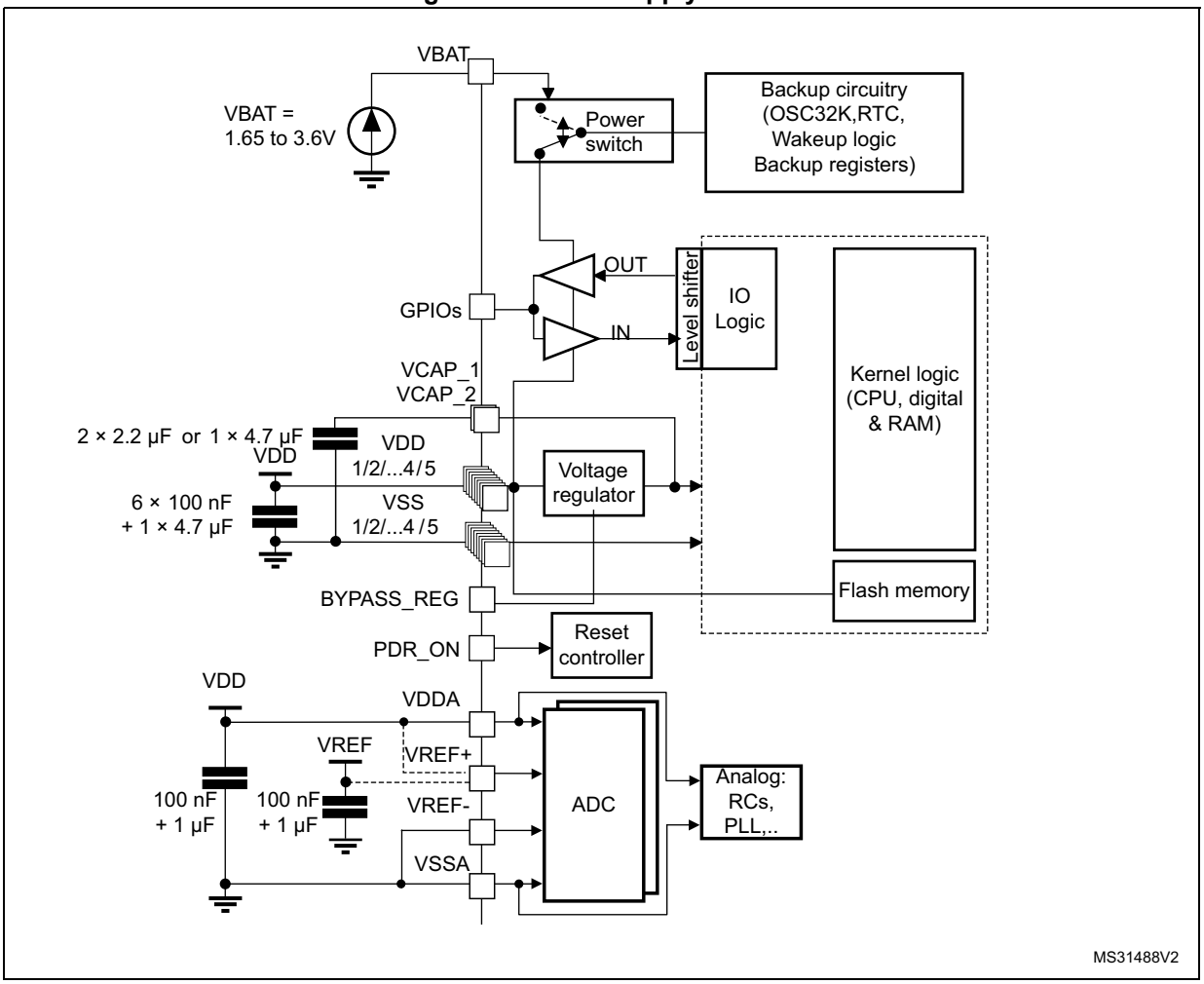

1. To connect PDR_ON pin, refer to *Section 3.14: Power supply supervisor*.
2. The 4.7 µF ceramic capacitor must be connected to one of the V_{DD} pin.
3. V_{CAP_2} pad is only available on LQFP100 and UFBGA100 packages.
4. V_{DDA}=V_{DD} and V_{SSA}=V_{SS}.

Caution: Each power supply pair (V_{DD}/V_{SS}, V_{DDA}/V_{SSA} ...) must be decoupled with filtering ceramic capacitors as shown above. These capacitors must be placed as close as possible to, or below, the appropriate pins on the underside of the PCB to ensure good operation of the device. It is not recommended to remove filtering capacitors to reduce PCB size or cost. This might cause incorrect operation of the device.

6.1.7 Current consumption measurement

Figure 19. Current consumption measurement scheme

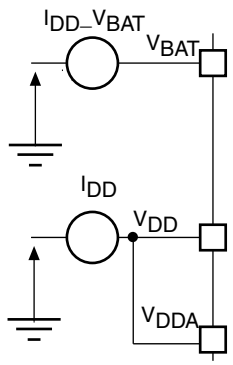

6.2 Absolute maximum ratings

Stresses above the absolute maximum ratings listed in *Table 11: Voltage characteristics*, *Table 12: Current characteristics*, and *Table 13: Thermal characteristics* may cause permanent damage to the device. These are stress ratings only and functional operation of the device at these conditions is not implied. Exposure to maximum rating conditions for extended periods may affect device reliability.

Table 11. Voltage characteristics

Symbol	Ratings	Min	Max	Unit
$V_{DD}–V_{SS}$	External main supply voltage (including V_{DDA}, V_{DD} and V_{BAT})(1)	–0.3	4.0	V
V_{IN}	Input voltage on FT pins(2)	V_{SS}–0.3	V_{DD}+4.0	
	Input voltage on any other pin	V_{SS}–0.3	4.0	
	Input voltage for BOOT0	V_{SS}	9.0	
$\|\Delta V_{DDx}\|$	Variations between different V_{DD} power pins	-	50	mV
$\|V_{SSX} – V_{SS}\|$	Variations between all the different ground pins	-	50	
$V_{ESD(HBM)}$	Electrostatic discharge voltage (human body model)	see *Section 6.3.14: Absolute maximum ratings (electrical sensitivity)*		

1. All main power (V_{DD}, V_{DDA}) and ground (V_{SS}, V_{SSA}) pins must always be connected to the external power supply, in the permitted range.
2. V_{IN} maximum value must always be respected. Refer to *Table 12* for the values of the maximum allowed injected current.

Table 12. Current characteristics

Symbol	Ratings	Max.	Unit
ΣI_{VDD}	Total current into sum of all V_{DD_x} power lines (source)(1)	160	mA
ΣI_{VSS}	Total current out of sum of all V_{SS_x} ground lines (sink)(1)	-160	
I_{VDD}	Maximum current into each V_{DD_x} power line (source)(1)	100	
I_{VSS}	Maximum current out of each V_{SS_x} ground line (sink)(1)	-100	
I_{IO}	Output current sunk by any I/O and control pin	25	
	Output current sourced by any I/O and control pin	-25	
ΣI_{IO}	Total output current sunk by sum of all I/O and control pins (2)	120	
	Total output current sourced by sum of all I/Os and control pins(2)	-120	
$I_{INJ(PIN)}$ (3)	Injected current on FT pins (4)	–5/+0	
	Injected current on NRST and B pins (4)		
$\Sigma I_{INJ(PIN)}$	Total injected current (sum of all I/O and control pins)(5)	±25	

1. All main power (V_{DD}, V_{DDA}) and ground (V_{SS}, V_{SSA}) pins must always be connected to the external power supply, in the permitted range.
2. This current consumption must be correctly distributed over all I/Os and control pins. The total output current must not be sunk/sourced between two consecutive power supply pins referring to high pin count LQFP packages.
3. Negative injection disturbs the analog performance of the device. See note in *Section 6.3.20: 12-bit ADC characteristics*.
4. Positive injection is not possible on these I/Os and does not occur for input voltages lower than the specified maximum value.
5. When several inputs are submitted to a current injection, the maximum $\Sigma I_{INJ(PIN)}$ is the absolute sum of the positive and negative injected currents (instantaneous values).

Table 13. Thermal characteristics

Symbol	Ratings	Value	Unit
T_{STG}	Storage temperature range	–65 to +150	°C
T_J	Maximum junction temperature	125	
T_{LEAD}	Maximum lead temperature during soldering (WLCSP49, LQFP64/100, UFQFPN48, UFBGA100)	see note (1)	

1. Compliant with JEDEC Std J-STD-020D (for small body, Sn-Pb or Pb assembly), the ST ECOPACK® 7191395 specification, and the European directive on Restrictions on Hazardous Substances (ROHS directive 2011/65/EU, July 2011).

6.3 Operating conditions

6.3.1 General operating conditions

Table 14. General operating conditions

Symbol	Parameter	Conditions	Min	Typ	Max	Unit
f_{HCLK}	Internal AHB clock frequency	Power Scale3: Regulator ON, VOS[1:0] bits in PWR_CR register = 0x01	0	-	60	MHz
		Power Scale2: Regulator ON, VOS[1:0] bits in PWR_CR register = 0x10	0	-	84	
f_{PCLK1}	Internal APB1 clock frequency		0	-	42	
f_{PCLK2}	Internal APB2 clock frequency		0	-	84	
V_{DD}	Standard operating voltage		1.7(1)	-	3.6	V
V_{DDA} (2)(3)	Analog operating voltage (ADC limited to 1.2 M samples)	Must be the same potential as V_{DD}(4)	1.7(1)	-	2.4	
	Analog operating voltage (ADC limited to 2.4 M samples)		2.4	-	3.6	
V_{BAT}	Backup operating voltage		1.65	-	3.6	
V_{12}	Regulator ON: 1.2 V internal voltage on V_{CAP_1}/V_{CAP_2} pins	VOS[1:0] bits in PWR_CR register = 0x01 Max frequency 60 MHz	1.08(5)	1.14	1.20(5)	
		VOS[1:0] bits in PWR_CR register = 0x10 Max frequency 84 MHz	1.20(5)	1.26	1.32(5)	
V_{12}	Regulator OFF: 1.2 V external voltage must be supplied on V_{CAP_1}/V_{CAP_2} pins	Max. frequency 60 MHz.	1.1	1.14	1.2	
		Max. frequency 84 MHz.	1.2	1.26	1.32	
V_{IN}	Input voltage on RST and FT pins(6)	$2\ V \leq V_{DD} \leq 3.6\ V$	–0.3	-	5.5	
		$V_{DD} \leq 2\ V$	–0.3	-	5.2	
	Input voltage on BOOT0 pin		0	-	9	
P_D	Maximum allowed package power dissipation for suffix 7(7)	UFQFPN48	-	-	625	mW
		WLCSP49	-	-	392	
		LQFP64	-	-	313	
		LQFP100	-	-	465	
		UFBGA100	-	-	323	

Table 14. General operating conditions (continued)

Symbol	Parameter	Conditions	Min	Typ	Max	Unit
T_A	Ambient temperature for 6 suffix version	Maximum power dissipation	–40	-	85	°C
		Low power dissipation(8)	–40	-	105	
	Ambient temperature for 7 suffix version	Maximum power dissipation	–40	-	105	
		Low power dissipation(8)	–40	-	125	
T_J	Junction temperature range	6 suffix version	–40	-	105	
		7 suffix version	–40	-	125	

1. V_{DD}/V_{DDA} minimum value of 1.7 V with the use of an external power supply supervisor (refer to *Section 3.14.2: Internal reset OFF*).
2. When the ADC is used, refer to *Table 66: ADC characteristics*.
3. If V_{REF+} pin is present, it must respect the following condition: V_{DDA}-V_{REF+} < 1.2 V.
4. It is recommended to power V_{DD} and V_{DDA} from the same source. A maximum difference of 300 mV between V_{DD} and V_{DDA} can be tolerated during power-up and power-down operation.
5. Guaranteed by test in production
6. To sustain a voltage higher than VDD+0.3, the internal Pull-up and Pull-Down resistors must be disabled
7. If T_A is lower, higher P_D values are allowed as long as T_J does not exceed T_{Jmax}.
8. In low power dissipation state, T_A can be extended to this range as long as T_J does not exceed T_{Jmax}.

Table 15. Features depending on the operating power supply range

Operating power supply range	ADC operation	Maximum Flash memory access frequency with no wait states ($f_{Flashmax}$)	Maximum Flash memory access frequency with wait states (1)(2)	I/O operation	Clock output frequency on I/O pins(3)	Possible Flash memory operations
V_{DD} =1.7 to 2.1 V(4)	Conversion time up to 1.2 Msps	20 MHz(5)	84 MHz with 4 wait states	– No I/O compensation	up to 30 MHz	8-bit erase and program operations only
V_{DD} = 2.1 to 2.4 V	Conversion time up to 1.2 Msps	22 MHz	84 MHz with 3 wait states	– No I/O compensation	up to 30 MHz	16-bit erase and program operations
V_{DD} = 2.4 to 2.7 V	Conversion time up to 2.4 Msps	24 MHz	84 MHz with 3 wait states	– I/O compensation works	up to 48 MHz	16-bit erase and program operations
V_{DD} = 2.7 to 3.6 V(6)	Conversion time up to 2.4 Msps	30 MHz	84 MHz with 2 wait states	– I/O compensation works	– up to 84 MHz when V_{DD} = 3.0 to 3.6 V – up to 48 MHz when V_{DD} = 2.7 to 3.0 V	32-bit erase and program operations

1. Applicable only when the code is executed from Flash memory. When the code is executed from RAM, no wait state is required.
2. Thanks to the ART accelerator and the 128-bit Flash memory, the number of wait states given here does not impact the execution speed from Flash memory since the ART accelerator allows to achieve a performance equivalent to 0 wait state program execution.
3. Refer to for frequencies vs. external load.
4. V_{DD}/V_{DDA} minimum value of 1.7 V, with the use of an external power supply supervisor (refer to *Section 3.14.2: Internal reset OFF*).
5. Prefetch is not available. Refer to AN3430 application note for details on how to adjust performance and power.
6. The voltage range for the USB full speed embedded PHY can drop down to 2.7 V. However the electrical characteristics of D- and D+ pins will be degraded between 2.7 and 3 V.

6.3.2 VCAP1/VCAP2 external capacitors

Stabilization for the main regulator is achieved by connecting external capacitor C_{EXT} to the VCAP1 and VCAP2 pin. For packages supporting only 1 VCAP pin, the 2 CEXT capacitors are replaced by a single capacitor.

C_{EXT} is specified in *Table 16*.

Figure 20. External capacitor C_{EXT}

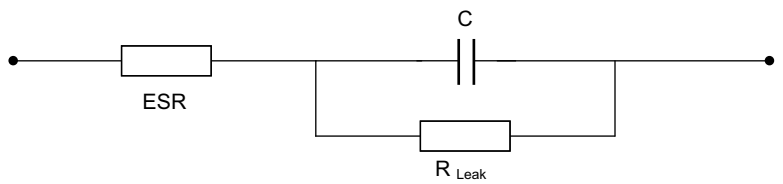

1. Legend: ESR is the equivalent series resistance.

Table 16. VCAP1/VCAP2 operating conditions(1)

Symbol	Parameter	Conditions
CEXT	Capacitance of external capacitor with available VCAP1 and VCAP2 pins	2.2 µF
ESR	ESR of external capacitor with available VCAP1 and VCAP2 pins	< 2 Ω
CEXT	Capacitance of external capacitor with a single VCAP pin available	4.7 µF
ESR	ESR of external capacitor with a single VCAP pin available	< 1 Ω

1. When bypassing the voltage regulator, the two 2.2 µF V_{CAP} capacitors are not required and should be replaced by two 100 nF decoupling capacitors.

6.3.3 Operating conditions at power-up/power-down (regulator ON)

Subject to general operating conditions for T_A.

Table 17. Operating conditions at power-up / power-down (regulator ON)

Symbol	Parameter	Min	Max	Unit
t_{VDD}	V_{DD} rise time rate	20	∞	µs/V
	V_{DD} fall time rate	20	∞	

6.3.4 Operating conditions at power-up / power-down (regulator OFF)

Subject to general operating conditions for T_A.

Table 18. Operating conditions at power-up / power-down (regulator OFF)(1)

Symbol	Parameter	Conditions	Min	Max	Unit
t_{VDD}	V_{DD} rise time rate	Power-up	20	∞	µs/V
	V_{DD} fall time rate	Power-down	20	∞	
t_{VCAP}	V_{CAP_1} and V_{CAP_2} rise time rate	Power-up	20	∞	
	V_{CAP_1} and V_{CAP_2} fall time rate	Power-down	20	∞	

1. To reset the internal logic at power-down, a reset must be applied on pin PA0 when V_{DD} reach below 1.08 V.

Note: This feature is only available for UFBGA100 package.

6.3.5 Embedded reset and power control block characteristics

The parameters given in *Table 19* are derived from tests performed under ambient temperature and V_{DD} supply voltage @ 3.3V.

Table 19. Embedded reset and power control block characteristics

Symbol	Parameter	Conditions	Min	Typ	Max	Unit
V_{PVD}	Programmable voltage detector level selection	PLS[2:0]=000 (rising edge)	2.09	2.14	2.19	V
		PLS[2:0]=000 (falling edge)	1.98	2.04	2.08	
		PLS[2:0]=001 (rising edge)	2.23	2.30	2.37	
		PLS[2:0]=001 (falling edge)	2.13	2.19	2.25	
		PLS[2:0]=010 (rising edge)	2.39	2.45	2.51	
		PLS[2:0]=010 (falling edge)	2.29	2.35	2.39	
		PLS[2:0]=011 (rising edge)	2.54	2.60	2.65	
		PLS[2:0]=011 (falling edge)	2.44	2.51	2.56	
		PLS[2:0]=100 (rising edge)	2.70	2.76	2.82	
		PLS[2:0]=100 (falling edge)	2.59	2.66	2.71	
		PLS[2:0]=101 (rising edge)	2.86	2.93	2.99	
		PLS[2:0]=101 (falling edge)	2.65	2.84	3.02	
		PLS[2:0]=110 (rising edge)	2.96	3.03	3.10	
		PLS[2:0]=110 (falling edge)	2.85	2.93	2.99	
		PLS[2:0]=111 (rising edge)	3.07	3.14	3.21	
		PLS[2:0]=111 (falling edge)	2.95	3.03	3.09	
$V_{PVDhyst}$(2)	PVD hysteresis		-	100	-	mV
$V_{POR/PDR}$	Power-on/power-down reset threshold	Falling edge	1.60(1)	1.68	1.76	V
		Rising edge	1.64	1.72	1.80	
$V_{PDRhyst}$(2)	PDR hysteresis		-	40	-	mV
V_{BOR1}	Brownout level 1 threshold	Falling edge	2.13	2.19	2.24	V
		Rising edge	2.23	2.29	2.33	
V_{BOR2}	Brownout level 2 threshold	Falling edge	2.44	2.50	2.56	
		Rising edge	2.53	2.59	2.63	
V_{BOR3}	Brownout level 3 threshold	Falling edge	2.75	2.83	2.88	
		Rising edge	2.85	2.92	2.97	
$V_{BORhyst}$(2)	BOR hysteresis		-	100	-	mV
$T_{RSTTEMPO}$(2)(3)	POR reset timing		0.5	1.5	3.0	ms

Table 19. Embedded reset and power control block characteristics (continued)

Symbol	Parameter	Conditions	Min	Typ	Max	Unit
I_{RUSH}(2)	InRush current on voltage regulator power-on (POR or wakeup from Standby)		-	160	200	mA
E_{RUSH}(2)	InRush energy on voltage regulator power-on (POR or wakeup from Standby)	V_{DD} = 1.7 V, T_A = 105 °C, I_{RUSH} = 171 mA for 31 µs	-	-	5.4	µC

1. The product behavior is guaranteed by design down to the minimum $V_{POR/PDR}$ value.
2. Guaranteed by design, not tested in production.
3. The reset timing is measured from the power-on (POR reset or wakeup from V_{BAT}) to the instant when first instruction is fetched by the user application code.

6.3.6 Supply current characteristics

The current consumption is a function of several parameters and factors such as the operating voltage, ambient temperature, I/O pin loading, device software configuration, operating frequencies, I/O pin switching rate, program location in memory and executed binary code.
The current consumption is measured as described in *Figure 19: Current consumption measurement scheme*.

All the run-mode current consumption measurements given in this section are performed with a reduced code that gives a consumption equivalent to CoreMark code.

Typical and maximum current consumption

The MCU is placed under the following conditions:

- All I/O pins are in input mode with a static value at VDD or VSS (no load).
- All peripherals are disabled except if it is explicitly mentioned.
- The Flash memory access time is adjusted to both f_{HCLK} frequency and VDD ranges (refer to *Table 15: Features depending on the operating power supply range*).
- The voltage scaling is adjusted to f_{HCLK} frequency as follows:
  - Scale 3 for $f_{HCLK} \leq$ 60 MHz
  - Scale 2 for 60 MHz < $f_{HCLK} \leq$ 84 MHz
- The system clock is HCLK, $f_{PCLK1} = f_{HCLK}/2$, and $f_{PCLK2} = f_{HCLK}$.
- External clock is 4 MHz and PLL is on
- The maximum values are obtained for V_{DD} = 3.6 V and a maximum ambient temperature (T_A), and the typical values for T_A= 25 °C and V_{DD} = 3.3 V unless otherwise specified.

Table 20. Typical and maximum current consumption, code with data processing (ART accelerator disabled) running from SRAM - V_{DD} = 1.7 V

Symbol	Parameter	Conditions	f_{HCLK} (MHz)	Typ	Max(1)			Unit
				T_A= 25 °C	T_A= 25 °C	T_A=85 °C	T_A=105 °C	
I_{DD}	Supply current in **Run mode**	External clock, all peripherals enabled(2)(3)	84	21.8	23.1	24.1	25.3(4)	mA
			60	15.8	16.5	17.5	18.7	
			40	11.4	11.9	12.9	13.9	
			20	6.0	6.3	7.3	8.3	
		External clock, all peripherals disabled(3)	84	12.7	13.5	14.5	16.3(4)	
			60	9.2	10.5	11.5	12.8	
			40	6.7	7.1	8.1	9.1	
			20	3.6	3.8	4.8	5.8	

1. Guaranteed by characterization, not tested in production unless otherwise specified
2. When analog peripheral blocks such as ADC, HSE, LSE, HSI, or LSI are ON, an additional power consumption has to be considered.
3. When the ADC is ON (ADON bit set in the ADC_CR2 register), add an additional power consumption of 1.6 mA for the analog part.
4. Tested in production.

Table 21. Typical and maximum current consumption, code with data processing (ART accelerator disabled) running from SRAM

Symbol	Parameter	Conditions	f_{HCLK} (MHz)	Typ	Max(1)			Unit
					T_A= 25 °C	T_A=85 °C	T_A=105 °C	
I_{DD}	Supply current in **Run mode**	External clock, all peripherals enabled(2)(3)	84	22.0	23.1	24.1	25.3	mA
			60	16.0	16.9	17.9	19.8	
			40	11.6	12.1	13.1	14.1	
			20	6.2	6.5	7.5	8.5	
		External clock, all peripherals disabled(3)	84	12.9	14.0	15.0	16.3	
			60	9.5	10.5	11.5	12.8	
			40	6.9	7.3	8.3	9.3	
			20	3.8	4.0	5.0	6.0	

1. Guaranteed by characterization, not tested in production unless otherwise specified
2. When analog peripheral blocks such as ADC, HSE, LSE, HSI, or LSI are ON, an additional power consumption has to be considered.
3. When the ADC is ON (ADON bit set in the ADC_CR2 register), add an additional power consumption of 1.6 mA for the analog part.

Table 22. Typical and maximum current consumption in run mode, code with data processing (ART accelerator enabled except prefetch) running from Flash memory- V_{DD} = 1.7 V

Symbol	Parameter	Conditions	f_{HCLK} (MHz)	Typ	Max(1)			Unit
					T_A = 25 °C	T_A = 85 °C	T_A = 105 °C	
I_{DD}	Supply current in **Run mode**	External clock, all peripherals enabled(2)(3)	84	23.2	24.5	25.6	26.6	mA
			60	15.1	16.3	17.4	18.4	
			40	10.8	12.1	13.2	14.2	
			30	8.8	10.0	11.1	12.2	
			20	6.9	8.0	9.0	10.1	
		External clock, all peripherals disabled(3)	84	12.3	13.6	14.7	15.7	
			60	8.2	9.4	10.5	11.5	
			40	6.0	7.3	8.3	9.4	
			30	4.9	6.2	7.2	8.3	
			20	4.0	5.1	6.1	7.2	

1. Guaranteed by characterization, not tested in production unless otherwise specified.
2. Add an additional power consumption of 1.6 mA per ADC for the analog part. In applications, this consumption occurs only while the ADC is ON (ADON bit is set in the ADC_CR2 register).
3. When the ADC is ON (ADON bit set in the ADC_CR2), add an additional power consumption of 1.6mA per ADC for the analog part.

Table 23. Typical and maximum current consumption in run mode, code with data processing (ART accelerator enabled except prefetch) running from Flash memory - V_{DD} = 3.3 V

Symbol	Parameter	Conditions	f_{HCLK} (MHz)	Typ	Max(1)			Unit
					T_A = 25 °C	T_A = 85 °C	T_A = 105 °C	
I_{DD}	Supply current in **Run mode**	External clock, all peripherals enabled(2)(3)	84	23.4	24.7	25.8	26.8	mA
			60	15.3	16.5	17.6	18.6	
			40	11.0	12.3	13.4	14.4	
			30	9.0	10.2	11.3	12.4	
			20	7.1	8.2	9.2	10.3	
		External clock, all peripherals disabled(3)	84	12.5	13.8	14.9	15.9	
			60	8.4	9.6	10.7	11.7	
			40	6.2	7.5	8.5	9.6	
			30	5.1	6.4	7.4	8.5	
			20	4.2	5.3	6.3	7.4	

1. Guaranteed by characterization, not tested in production unless otherwise specified.
2. Add an additional power consumption of 1.6 mA per ADC for the analog part. In applications, this consumption occurs only while the ADC is ON (ADON bit is set in the ADC_CR2 register).
3. When the ADC is ON (ADON bit set in the ADC_CR2), add an additional power consumption of 1.6mA per ADC for the analog part.

Table 24. Typical and maximum current consumption in run mode, code with data processing (ART accelerator disabled) running from Flash memory

Symbol	Parameter	Conditions	f_{HCLK} (MHz)	Typ	Max(1)			Unit
					T_A = 25 °C	T_A = 85 °C	T_A = 105 °C	
I_{DD}	Supply current in **Run mode**	External clock, all peripherals enabled(2)(3)	84	31.1	32.2	34.3	36.3	mA
			60	21.7	22.1	23.2	24.2	
			40	15.5	16.1	17.1	18.1	
			30	12.6	13.1	14.1	15.1	
			20	9.8	10.1	11.1	12.1	
		External clock, all peripherals disabled(3)	84	20.2	21.3	23.4	25.4	
			60	14.9	15.3	16.3	17.3	
			40	10.6	11.2	12.2	13.3	
			30	8.8	9.2	10.2	11.2	
			20	6.9	7.2	8.2	9.2	

1. Guaranteed by characterization, not tested in production unless otherwise specified.
2. Add an additional power consumption of 1.6 mA per ADC for the analog part. In applications, this consumption occurs only while the ADC is ON (ADON bit is set in the ADC_CR2 register).
3. When the ADC is ON (ADON bit set in the ADC_CR2), add an additional power consumption of 1.6mA per ADC for the analog part.

Table 25. Typical and maximum current consumption in run mode, code with data processing (ART accelerator enabled with prefetch) running from Flash memory

Symbol	Parameter	Conditions	f_{HCLK} (MHz)	Typ	Max(1)			Unit
					T_A = 25 °C	T_A = 85 °C	T_A = 105 °C	
I_{DD}	Supply current in **Run mode**	External clock, all peripherals enabled(2)(3)	84	32.5	33.3	34.3	35.4	mA
			60	22.2	23.3	24.3	25.3	
			40	16.0	17.1	18.1	19.2	
			30	12.9	14.1	15.1	16.1	
			20	10.2	11.1	12.1	13.1	
		External clock, all peripherals disabled(3)	84	21.6	22.4	23.5	24.5	
			60	15.3	16.4	17.4	18.4	
			40	11.2	12.3	13.3	14.3	
			30	9.0	10.2	11.2	12.3	
			20	7.3	8.2	9.2	10.2	

1. Guaranteed by characterization, not tested in production unless otherwise specified.
2. Add an additional power consumption of 1.6 mA per ADC for the analog part. In applications, this consumption occurs only while the ADC is ON (ADON bit is set in the ADC_CR2 register).
3. When the ADC is ON (ADON bit set in the ADC_CR2), add an additional power consumption of 1.6mA per ADC for the analog part.

Table 26. Typical and maximum current consumption in Sleep mode

Symbol	Parameter	Conditions	f_{HCLK} (MHz)	Typ	Max(1)			Unit
					T_A = 25 °C	T_A = 85 °C	T_A = 105 °C	
I_{DD}	Supply current in **Sleep** mode	External clock, all peripherals enabled(2)(3)	84	16.6	17.4	18.4	19.5	mA
			60	10.8	11.2	12.3	13.3	
			40	8.3	9.0	10.0	11.0	
			30	6.8	7.1	8.1	9.1	
			20	5.9	6.1	7.1	8.1	
		External clock, all peripherals disabled(3)(4)	84	5.3	6.1	7.1	8.2	
			60	3.7	4.1	5.1	6.1	
			40	2.9	3.1	4.1	5.1	
			30	2.7	3.1	4.1	5.1	
			20	2.7	3.1	4.1	5.1	

1. Guaranteed by characterization, not tested in production unless otherwise specified.
2. Add an additional power consumption of 1.6 mA per ADC for the analog part. In applications, this consumption occurs only while the ADC is ON (ADON bit is set in the ADC_CR2 register).
3. When the ADC is ON (ADON bit set in the ADC_CR2 register), add an additional power consumption of 1.6 mA for the analog part.
4. Same current consumption for f_{HCLK} at 30 MHz and 20 MHz due to VCO running slower at 30 MHz.

Table 27. Typical and maximum current consumptions in Stop mode - V_{DD}=1.8 V

Symbol	Parameter	Conditions	Typ	Max(1)			Unit
			T_A = 25 °C	T_A = 25 °C	T_A = 85 °C	T_A = 105 °C	
I_{DD_STOP}	Main regulator usage	Flash in Stop mode, all oscillators OFF, no independent watchdog	109	135	440	650	µA
	Low power regulator usage		41	65	310	530(2)	
	Main regulator usage	Flash in Deep power down mode, all oscillators OFF, no independent watchdog	72	95	345	530	
	Low power regulator usage		12	36	260	510(2)	
	Low power low voltage regulator usage		10	27	230	460	

1. Guaranteed by characterization, not tested in production.
2. Guaranteed by test in production.

Table 28. Typical and maximum current consumption in Stop mode - V_{DD}=3.3 V

Symbol	Parameter	Conditions	Typ	Max(1)			Unit
			T_A = 25 °C	T_A = 25 °C	T_A = 85 °C	T_A = 105 °C	
I_{DD_STOP}	Main regulator usage	Flash in Stop mode, all oscillators OFF, no independent watchdog	111	140	450	670	µA
	Low power regulator usage		42	65	330	560	
	Main regulator usage	Flash in Deep power down mode, all oscillators OFF, no independent watchdog	73	100	360	560	
	Low power regulator usage		12	36	270	520	
	Low power low voltage regulator usage		10	28	230	470	

1. Guaranteed by characterization, not tested in production.

Table 29. Typical and maximum current consumption in Standby mode - V_{DD}=1.8 V

Symbol	Parameter	Conditions	Typ(1)	Max(2)			Unit
			T_A = 25 °C	T_A = 25 °C	T_A = 85 °C	T_A = 105 °C	
I_{DD_STBY}	Supply current in Standby mode	Low-speed oscillator (LSE) and RTC ON	2.4	4.0	12.0	24.0	µA
		RTC and LSE OFF	1.8	3.0(3)	11.0	23.0(3)	

1. When the PDR is OFF (internal reset is OFF), the typical current consumption is reduced by 1.2 µA.
2. Guaranteed by characterization, not tested in production unless otherwise specified.
3. Guaranteed by test in production.

Table 30. Typical and maximum current consumption in Standby mode - V_{DD}=3.3 V

Symbol	Parameter	Conditions	Typ(1)	Max(2)			Unit
			T_A = 25 °C	T_A = 25 °C	T_A = 85 °C	T_A = 105 °C	
I_{DD_STBY}	Supply current in Standby mode	Low-speed oscillator (LSE) and RTC ON	2.8	5.0	14.0	28.0	µA
		RTC and LSE OFF	2.1	4.0(3)	13.0	27.0(3)	

1. When the PDR is OFF (internal reset is OFF), the typical current consumption is reduced by 1.2 µA.
2. Guaranteed by characterization, not tested in production unless otherwise specified.
3. Guaranteed by test in production.

Table 31. Typical and maximum current consumptions in V_{BAT} mode

Symbol	Parameter	Conditions[1]	Typ			Max[2]		Unit
			T_A = 25 °C			T_A = 85 °C	T_A = 105 °C	
			V_{BAT} = 1.7 V	V_{BAT}= 2.4 V	V_{BAT} = 3.3 V	V_{BAT} = 3.6 V		
I_{DD_VBAT}	Backup domain supply current	Low-speed oscillator (LSE) and RTC ON	0.66	0.76	0.97	3.0	5.0	µA
		RTC and LSE OFF	0.1	0.1	0.1	2.0	4.0	

1. Crystal used: Abracon ABS07-120-32.768 kHz-T with a C_L of 6 pF for typical values.
2. Guaranteed by characterization, not tested in production.

Figure 21. Typical V_{BAT} current consumption (LSE and RTC ON)

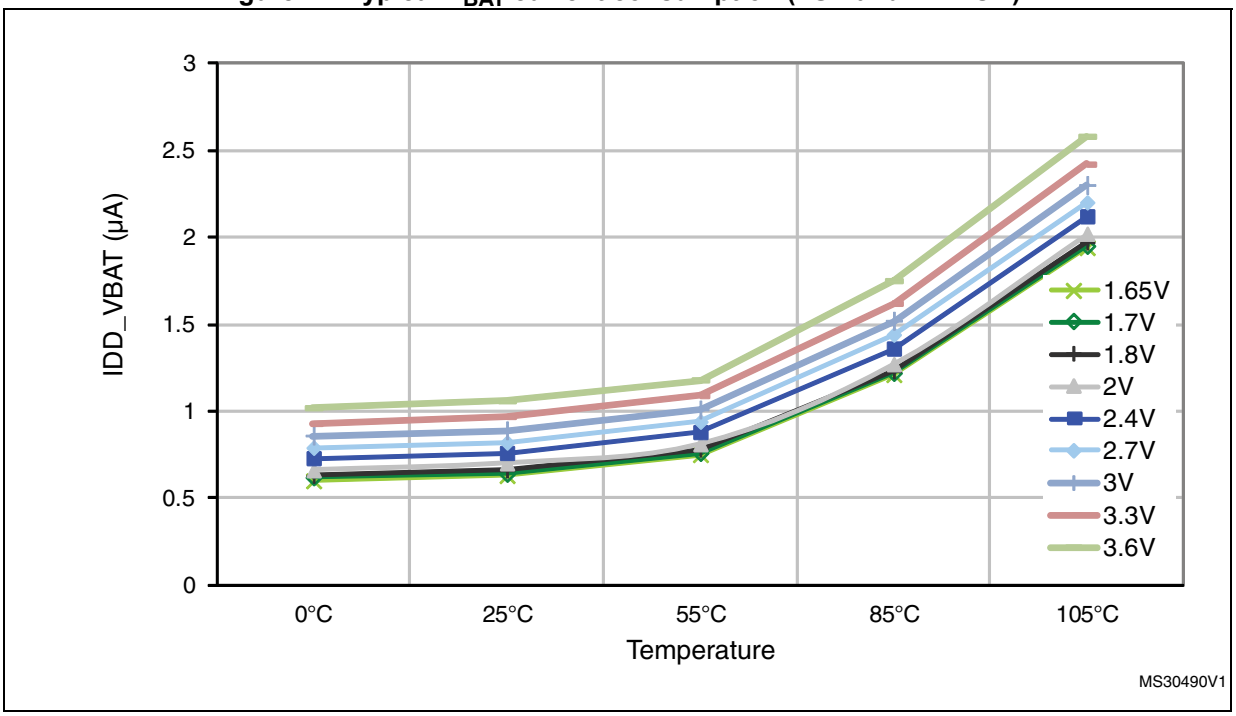

I/O system current consumption

The current consumption of the I/O system has two components: static and dynamic.

I/O static current consumption

All the I/Os used as inputs with pull-up generate current consumption when the pin is externally held low. The value of this current consumption can be simply computed by using the pull-up/pull-down resistors values given in *Table 54: I/O static characteristics*.

For the output pins, any external pull-down or external load must also be considered to estimate the current consumption.

Additional I/O current consumption is due to I/Os configured as inputs if an intermediate voltage level is externally applied. This current consumption is caused by the input Schmitt trigger circuits used to discriminate the input value. Unless this specific configuration is

required by the application, this supply current consumption can be avoided by configuring these I/Os in analog mode. This is notably the case of ADC input pins which should be configured as analog inputs.

Caution: Any floating input pin can also settle to an intermediate voltage level or switch inadvertently, as a result of external electromagnetic noise. To avoid current consumption related to floating pins, they must either be configured in analog mode, or forced internally to a definite digital value. This can be done either by using pull-up/down resistors or by configuring the pins in output mode.

I/O dynamic current consumption

In addition to the internal peripheral current consumption (see *Table 33: Peripheral current consumption*), the I/Os used by an application also contribute to the current consumption. When an I/O pin switches, it uses the current from the MCU supply voltage to supply the I/O pin circuitry and to charge/discharge the capacitive load (internal or external) connected to the pin:

$$I_{SW} = V_{DD} \times f_{SW} \times C$$

where

I_{SW} is the current sunk by a switching I/O to charge/discharge the capacitive load

V_{DD} is the MCU supply voltage

f_{SW} is the I/O switching frequency

C is the total capacitance seen by the I/O pin: $C = C_{INT} + C_{EXT}$

The test pin is configured in push-pull output mode and is toggled by software at a fixed frequency.

Table 32. Switching output I/O current consumption

Symbol	Parameter	Conditions[1]	I/O toggling frequency (f_{SW})	Typ	Unit
IDDIO	I/O switching current	V_{DD} = 3.3 V C = C_{INT}	2 MHz	0.05	mA
			8 MHz	0.15	
			25 MHz	0.45	
			50 MHz	0.85	
			60 MHz	1.00	
			84 MHz	1.40	
		V_{DD} = 3.3 V C_{EXT} = 0 pF C = C_{INT} + C_{EXT} + C_S	2 MHz	0.10	
			8 MHz	0.35	
			25 MHz	1.05	
			50 MHz	2.20	
			60 MHz	2.40	
			84 MHz	3.55	
		V_{DD} = 3.3 V C_{EXT} =10 pF C = C_{INT} + C_{EXT} + C_S	2 MHz	0.20	
			8 MHz	0.65	
			25 MHz	1.85	
			50 MHz	2.45	
			60 MHz	4.70	
			84 MHz	8.80	
		V_{DD} = 3.3 V C_{EXT} = 22 pF C = C_{INT} + C_{EXT} + C_S	2 MHz	0.25	
			8 MHz	1.00	
			25 MHz	3.45	
			50 MHz	7.15	
			60 MHz	11.55	
		V_{DD} = 3.3 V C_{EXT} = 33 pF C = C_{INT} + C_{EXT} + C_S	2 MHz	0.32	
			8 MHz	1.27	
			25 MHz	3.88	
			50 MHz	12.34	

1. C_S is the PCB board capacitance including the pad pin. C_S = 7 pF (estimated value).

On-chip peripheral current consumption

The MCU is placed under the following conditions:

- At startup, all I/O pins are in analog input configuration.
- All peripherals are disabled unless otherwise mentioned.
- The ART accelerator is ON.
- Voltage Scale 2 mode selected, internal digital voltage V12 = 1.26 V.
- HCLK is the system clock at 84 MHz. $f_{PCLK1} = f_{HCLK}/2$, and $f_{PCLK2} = f_{HCLK}$.
  The given value is calculated by measuring the difference of current consumption
  - with all peripherals clocked off
  - with only one peripheral clocked on
- Ambient operating temperature is 25 °C and V_{DD}=3.3 V.

Table 33. Peripheral current consumption

Peripheral		I_{DD} (typ)	Unit
AHB1 (up to 84MHz)	GPIOA	1.55	µA/MHz
	GPIOB	1.55	
	GPIOC	1.55	
	GPIOD	1.55	
	GPIOE	1.55	
	GPIOH	1.55	
	CRC	0.36	
	DMA1	20.24	
	DMA2	21.07	
APB1 (up to 42MHz)	TIM2	11.19	µA/MHz
	TIM3	8.57	
	TIM4	8.33	
	TIM5	11.19	
	PWR	0.71	
	USART2	3.33	
	I2C1/2/3	3.10	
	SPI2(1)	2.62	
	SPI3(1)	2.86	
	I2S2	1.90	
	I2S3	1.67	
	WWDG	0.71	
AHB2 (up to 84MHz)	OTG_FS	23.93	µA/MHz

Table 33. Peripheral current consumption (continued)

Peripheral		I_{DD} (typ)	Unit
APB2 (up to 84MHz)	TIM1	5.71	µA/MHz
	TIM9	2.86	
	TIM10	1.79	
	TIM11	2.02	
	ADC1(2)	2.98	
	SPI1	1.19	
	USART1	3.10	
	USART6	2.86	
	SDIO	5.95	
	SPI4	1.31	
	SYSCFG	0.71	

1. I2SMOD bit set in SPI_I2SCFGR register, and then the I2SE bit set to enable I2S peripheral.
2. When the ADC is ON (ADON bit set in the ADC_CR2 register), add an additional power consumption of 1.6 mA for the analog part.

6.3.7 Wakeup time from low-power modes

The wakeup times given in *Table 34* are measured starting from the wakeup event trigger up to the first instruction executed by the CPU:

- For Stop or Sleep modes: the wakeup event is WFE.
- WKUP (PA0) pin is used to wakeup from Standby, Stop and Sleep modes.

All timings are derived from tests performed under ambient temperature and V_{DD}=3.3 V.

Table 34. Low-power mode wakeup timings(1)

Symbol	Parameter	Min(1)	Typ(1)	Max(1)	Unit
$t_{WUSLEEP}$(2)	Wakeup from Sleep mode	-	4	6	CPU clock cycle
t_{WUSTOP}(2)	Wakeup from Stop mode, usage of main regulator	-	13.5	14.5	µs
	Wakeup from Stop mode, usage of main regulator, Flash memory in Deep power down mode	-	105	111	
	Wakeup from Stop mode, regulator in low power mode	-	21	33	
	Wakeup from Stop mode, regulator in low power mode, Flash memory in Deep power down mode	-	113	130	
$t_{WUSTDBY}$(2)(3)	Wakeup from Standby mode	-	314	407	µs

1. Guaranteed by characterization, not tested in production.
2. The wakeup times are measured from the wakeup event to the point in which the application code reads the first instruction.
3. $t_{WUSTDBY}$ maximum value is given at –40 °C.

6.3.8 External clock source characteristics

High-speed external user clock generated from an external source

In bypass mode the HSE oscillator is switched off and the input pin is a standard I/O. The external clock signal has to respect the *Table 54*. However, the recommended clock input waveform is shown in *Figure 22*.

The characteristics given in *Table 35* result from tests performed using an high-speed external clock source, and under ambient temperature and supply voltage conditions summarized in *Table 14*.

Table 35. High-speed external user clock characteristics

Symbol	Parameter	Conditions	Min	Typ	Max	Unit
f_{HSE_ext}	External user clock source frequency(1)		1	-	50	MHz
V_{HSEH}	OSC_IN input pin high level voltage		$0.7V_{DD}$	-	V_{DD}	V
V_{HSEL}	OSC_IN input pin low level voltage		V_{SS}	-	$0.3V_{DD}$	
$t_{w(HSE)}$ $t_{w(HSE)}$	OSC_IN high or low time(1)		5	-	-	ns
$t_{r(HSE)}$ $t_{f(HSE)}$	OSC_IN rise or fall time(1)		-	-	10	
$C_{in(HSE)}$	OSC_IN input capacitance(1)		-	5	-	pF
$DuCy_{(HSE)}$	Duty cycle		45	-	55	%
I_L	OSC_IN Input leakage current	$V_{SS} \leq V_{IN} \leq V_{DD}$	-	-	±1	µA

1. Guaranteed by design, not tested in production.

Low-speed external user clock generated from an external source

In bypass mode the LSE oscillator is switched off and the input pin is a standard I/O. The external clock signal has to respect the *Table 54*. However, the recommended clock input waveform is shown in *Figure 23*.

The characteristics given in *Table 36* result from tests performed using an low-speed external clock source, and under ambient temperature and supply voltage conditions summarized in *Table 14*.

Table 36. Low-speed external user clock characteristics

Symbol	Parameter	Conditions	Min	Typ	Max	Unit
f_{LSE_ext}	User External clock source frequency(1)		-	32.768	1000	kHz
V_{LSEH}	OSC32_IN input pin high level voltage		$0.7V_{DD}$	-	V_{DD}	V
V_{LSEL}	OSC32_IN input pin low level voltage		V_{SS}	-	$0.3V_{DD}$	
$t_{w(LSE)}$ $t_{f(LSE)}$	OSC32_IN high or low time(1)		450	-	-	ns
$t_{r(LSE)}$ $t_{f(LSE)}$	OSC32_IN rise or fall time(1)		-	-	50	
$C_{in(LSE)}$	OSC32_IN input capacitance(1)		-	5	-	pF
$DuCy_{(LSE)}$	Duty cycle		30	-	70	%
I_L	OSC32_IN Input leakage current	$V_{SS} \leq V_{IN} \leq V_{DD}$	-	-	±1	µA

1. Guaranteed by design, not tested in production.

Figure 22. High-speed external clock source AC timing diagram

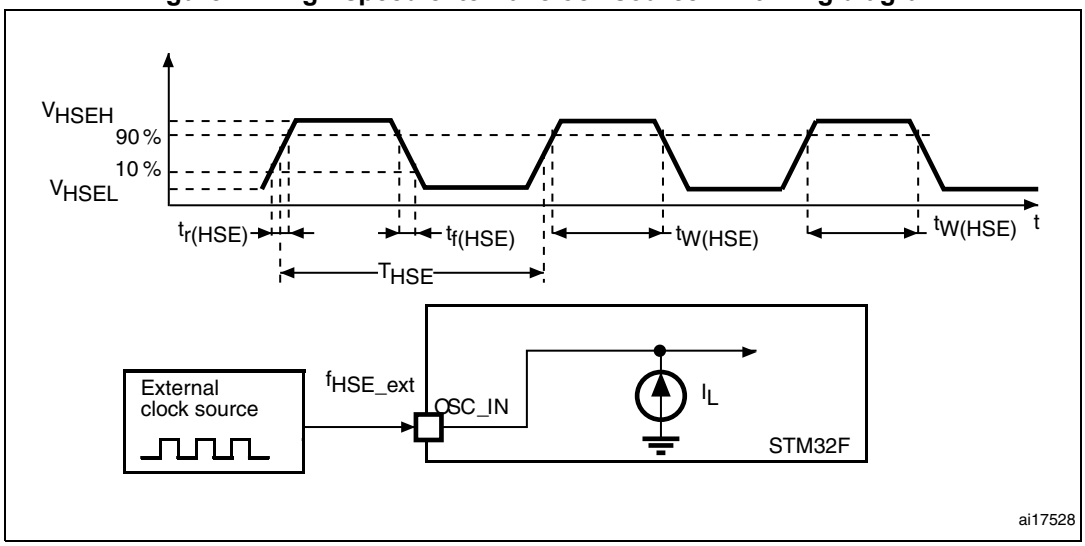

Figure 23. Low-speed external clock source AC timing diagram

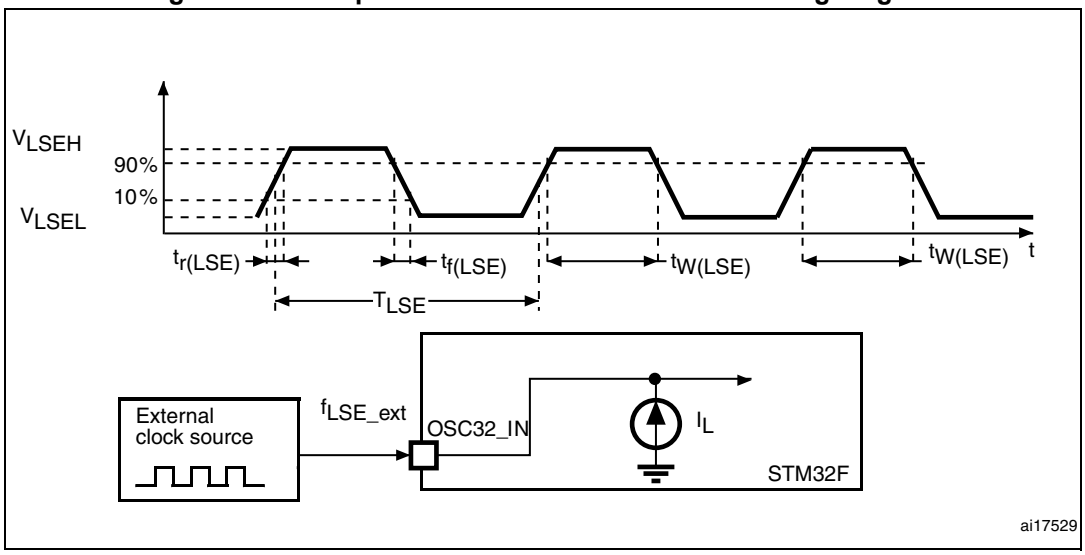

High-speed external clock generated from a crystal/ceramic resonator

The high-speed external (HSE) clock can be supplied with a 4 to 26 MHz crystal/ceramic resonator oscillator. All the information given in this paragraph are based on characterization results obtained with typical external components specified in *Table 37*. In the application, the resonator and the load capacitors have to be placed as close as possible to the oscillator pins in order to minimize output distortion and startup stabilization time. Refer to the crystal resonator manufacturer for more details on the resonator characteristics (frequency, package, accuracy).

Table 37. HSE 4-26 MHz oscillator characteristics(1)

Symbol	Parameter	Conditions	Min	Typ	Max	Unit
f_{OSC_IN}	Oscillator frequency		4	-	26	MHz
R_F	Feedback resistor		-	200	-	kΩ
I_{DD}	HSE current consumption	V_{DD}=3.3 V, ESR= 30 Ω, C_L=5 pF @25 MHz	-	450	-	µA
		V_{DD}=3.3 V, ESR= 30 Ω, C_L=10 pF @25 MHz	-	530	-	
$G_{m\_crit\_max}$	Maximum critical crystal g_m	Startup	-	-	1	mA/V
$t_{SU(HSE)}$(2)	Startup time	V_{DD} is stabilized	-	2	-	ms

1. Guaranteed by design, not tested in production.
2. $t_{SU(HSE)}$ is the startup time measured from the moment it is enabled (by software) to a stabilized 8 MHz oscillation is reached. This value is measured for a standard crystal resonator and it can vary significantly with the crystal manufacturer

For C_{L1} and C_{L2}, it is recommended to use high-quality external ceramic capacitors in the 5 pF to 25 pF range (typ.), designed for high-frequency applications, and selected to match the requirements of the crystal or resonator (see *Figure 24*). C_{L1} and C_{L2} are usually the same size. The crystal manufacturer typically specifies a load capacitance which is the

series combination of C_{L1} and C_{L2}. PCB and MCU pin capacitance must be included (10 pF can be used as a rough estimate of the combined pin and board capacitance) when sizing C_{L1} and C_{L2}.

Note: For information on selecting the crystal, refer to the application note AN2867 "Oscillator design guide for ST microcontrollers" available from the ST website www.st.com.

Figure 24. Typical application with an 8 MHz crystal

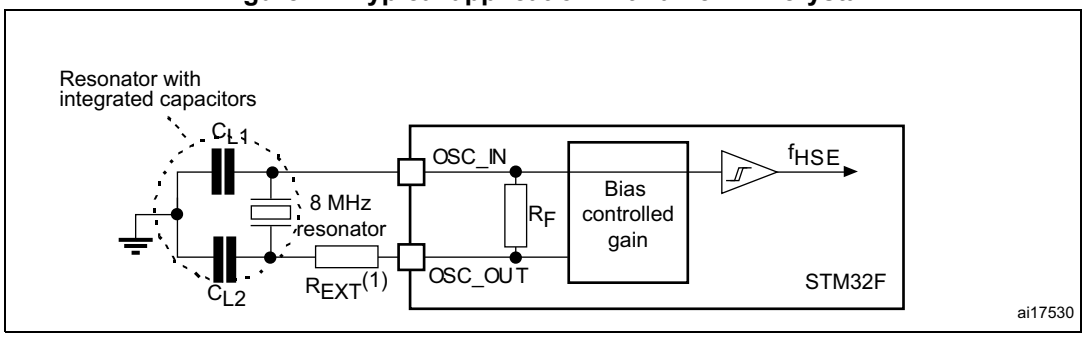

1. R_{EXT} value depends on the crystal characteristics.

Low-speed external clock generated from a crystal/ceramic resonator

The low-speed external (LSE) clock can be supplied with a 32.768 kHz crystal/ceramic resonator oscillator. All the information given in this paragraph are based on characterization results obtained with typical external components specified in *Table 38*. In the application, the resonator and the load capacitors have to be placed as close as possible to the oscillator pins in order to minimize output distortion and startup stabilization time. Refer to the crystal resonator manufacturer for more details on the resonator characteristics (frequency, package, accuracy).

Table 38. LSE oscillator characteristics (f_{LSE} = 32.768 kHz) (1)

Symbol	Parameter	Conditions	Min	Typ	Max	Unit
R_F	Feedback resistor		-	18.4	-	MΩ
I_{DD}	LSE current consumption		-	-	1	µA
G_m_crit_max	Maximum critical crystal g_m	Startup	-	-	0.56	µA/V
$t_{SU(LSE)}$(2)	startup time	V_{DD} is stabilized	-	2	-	s

1. Guaranteed by design, not tested in production.
2. $t_{SU(LSE)}$ is the startup time measured from the moment it is enabled (by software) to a stabilized 32.768 kHz oscillation is reached. This value is guaranteed by characterization and not tested in production. It is measured for a standard crystal resonator and it can vary significantly with the crystal manufacturer.

Note: For information on selecting the crystal, refer to the application note AN2867 "Oscillator design guide for ST microcontrollers" available from the ST website www.st.com.

Figure 25. Typical application with a 32.768 kHz crystal

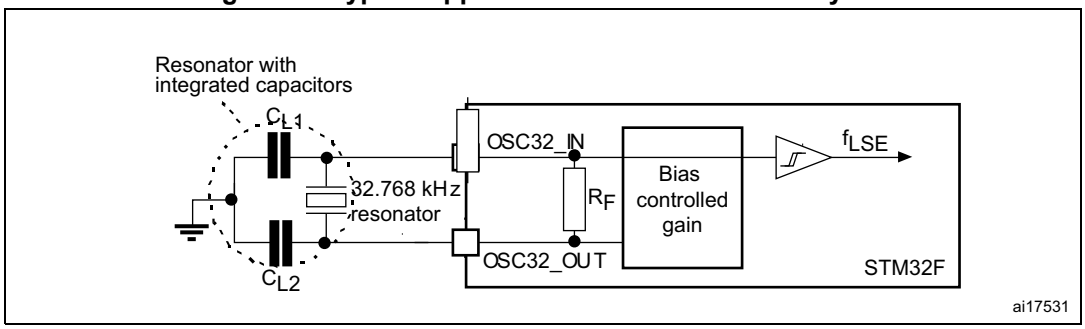

6.3.9 Internal clock source characteristics

The parameters given in *Table 39* and *Table 40* are derived from tests performed under ambient temperature and V_{DD} supply voltage conditions summarized in *Table 14*.

High-speed internal (HSI) RC oscillator

Table 39. HSI oscillator characteristics (1)

Symbol	Parameter	Conditions		Min	Typ	Max	Unit
f_{HSI}	Frequency			-	16	-	MHz
ACC_{HSI}	Accuracy of the HSI oscillator	User-trimmed with the RCC_CR register(2)		-	-	1	%
		Factory-calibrated	T_A = –40 to 105 °C(3)	–8	-	4.5	%
			T_A = –10 to 85 °C(3)	–4	-	4	%
			T_A = 25 °C	–1	-	1	%
$t_{su(HSI)}$(2)	HSI oscillator startup time			-	2.2	4	µs
$I_{DD(HSI)}$(2)	HSI oscillator power consumption			-	60	80	µA

1. V_{DD} = 3.3 V, T_A = –40 to 105 °C unless otherwise specified.
2. Guaranteed by design, not tested in production
3. Guaranteed by characterization, not tested in production

Figure 26. ACC_{HSI} versus temperature

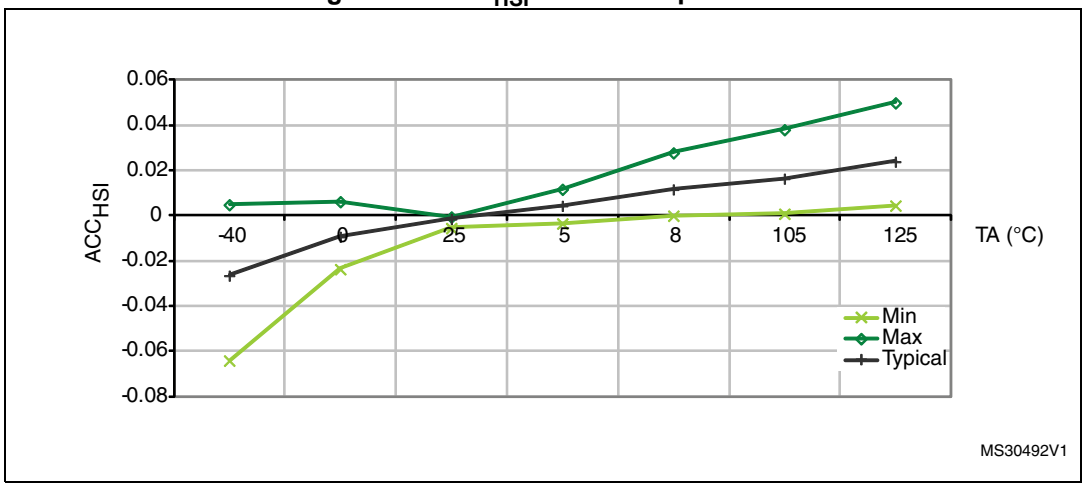

1. Guaranteed by characterization, not tested in production.

Low-speed internal (LSI) RC oscillator

Table 40. LSI oscillator characteristics (1)

Symbol	Parameter	Min	Typ	Max	Unit
f_{LSI}(2)	Frequency	17	32	47	kHz
$t_{su(LSI)}$(3)	LSI oscillator startup time	-	15	40	µs
$I_{DD(LSI)}$(3)	LSI oscillator power consumption	-	0.4	0.6	µA

1. V_{DD} = 3 V, T_A = –40 to 105 °C unless otherwise specified.
2. Guaranteed by characterization, not tested in production.
3. Guaranteed by design, not tested in production.

Figure 27. ACC_{LSI} versus temperature

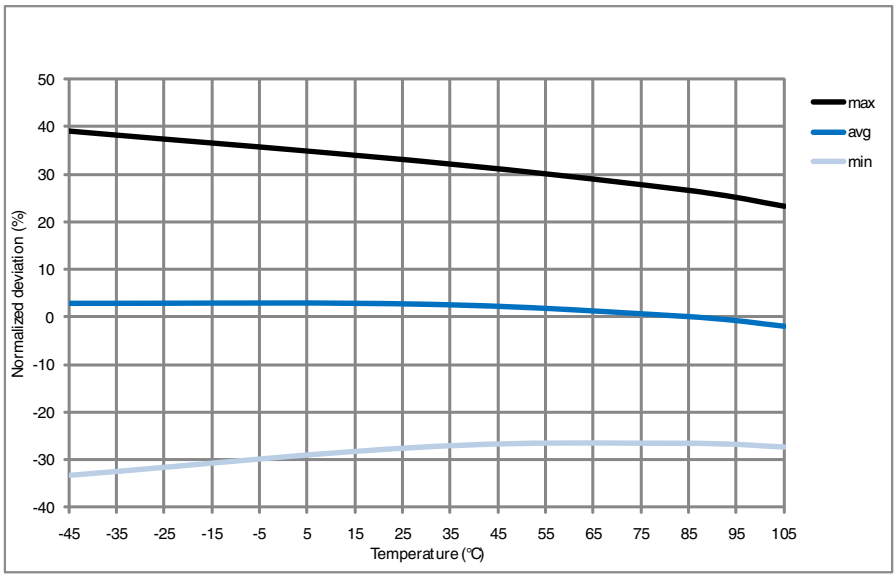

MS19013V1

6.3.10 PLL characteristics

The parameters given in *Table 41* and *Table 42* are derived from tests performed under temperature and V_{DD} supply voltage conditions summarized in *Table 14*.

Table 41. Main PLL characteristics

Symbol	Parameter	Conditions		Min	Typ	Max	Unit
f_{PLL_IN}	PLL input clock(1)			0.95(2)	1	2.10	MHz
f_{PLL_OUT}	PLL multiplier output clock			24	-	84	MHz
f_{PLL48_OUT}	48 MHz PLL multiplier output clock			-	48	75	MHz
f_{VCO_OUT}	PLL VCO output			192	-	432	MHz
t_{LOCK}	PLL lock time	VCO freq = 192 MHz		75	-	200	µs
		VCO freq = 432 MHz		100	-	300	
Jitter(3)	Cycle-to-cycle jitter	System clock 84 MHz	RMS	-	25	-	ps
			peak to peak	-	±150	-	
	Period Jitter		RMS	-	15	-	
			peak to peak	-	±200	-	

Table 41. Main PLL characteristics (continued)

Symbol	Parameter	Conditions	Min	Typ	Max	Unit
$I_{DD(PLL)}$(4)	PLL power consumption on VDD	VCO freq = 192 MHz VCO freq = 432 MHz	0.15 0.45	-	0.40 0.75	mA
$I_{DDA(PLL)}$(4)	PLL power consumption on VDDA	VCO freq = 192 MHz VCO freq = 432 MHz	0.30 0.55	-	0.40 0.85	

1. Take care of using the appropriate division factor M to obtain the specified PLL input clock values. The M factor is shared between PLL and PLLI2S.
2. Guaranteed by design, not tested in production.
3. The use of 2 PLLs in parallel could degraded the Jitter up to +30%.
4. Guaranteed by characterization, not tested in production.

Table 42. PLLI2S (audio PLL) characteristics

Symbol	Parameter	Conditions		Min	Typ	Max	Unit
f_{PLLI2S_IN}	PLLI2S input clock(1)			0.95(2)	1	2.10	MHz
f_{PLLI2S_OUT}	PLLI2S multiplier output clock			-	-	216	
f_{VCO_OUT}	PLLI2S VCO output			192	-	432	
t_{LOCK}	PLLI2S lock time	VCO freq = 192 MHz		75	-	200	µs
		VCO freq = 432 MHz		100	-	300	
Jitter(3)	Master I2S clock jitter	Cycle to cycle at 12.288 MHz on 48 KHz period, N=432, R=5	RMS	-	90	-	ps
			peak to peak	-	±280	-	
		Average frequency of 12.288 MHz N = 432, R = 5 on 1000 samples		-	90	-	
	WS I2S clock jitter	Cycle to cycle at 48 KHz on 1000 samples		-	400	-	
$I_{DD(PLLI2S)}$(4)	PLLI2S power consumption on V_{DD}	VCO freq = 192 MHz VCO freq = 432 MHz		0.15 0.45	-	0.40 0.75	mA
$I_{DDA(PLLI2S)}$(4)	PLLI2S power consumption on V_{DDA}	VCO freq = 192 MHz VCO freq = 432 MHz		0.30 0.55	-	0.40 0.85	

1. Take care of using the appropriate division factor M to have the specified PLL input clock values.
2. Guaranteed by design, not tested in production.
3. Value given with main PLL running.
4. Guaranteed by characterization, not tested in production.

6.3.11 PLL spread spectrum clock generation (SSCG) characteristics

The spread spectrum clock generation (SSCG) feature allows to reduce electromagnetic interferences(see *Table 49: EMI characteristics for WLCSP49*). It is available only on the main PLL.

Table 43. SSCG parameters constraint

Symbol	Parameter	Min	Typ	Max(1)	Unit
f_{Mod}	Modulation frequency	-	-	10	KHz
md	Peak modulation depth	0.25	-	2	%
MODEPER * INCSTEP		-	-	2^{15}-1	-

1. Guaranteed by design, not tested in production.

Equation 1

The frequency modulation period (MODEPER) is given by the equation below:

$$MODEPER = round[f_{PLL\_IN}/(4 \times f_{Mod})]$$

f_{PLL_IN} and f_{Mod} must be expressed in Hz.

As an example:

If f_{PLL_IN} = 1 MHz, and f_{MOD} = 1 kHz, the modulation depth (MODEPER) is given by equation 1:

$$MODEPER = round[10^6/(4 \times 10^3)] = 250$$

Equation 2

Equation 2 allows to calculate the increment step (INCSTEP):

$$INCSTEP = round[((2^{15} - 1) \times md \times PLLN)/(100 \times 5 \times MODEPER)]$$

f_{VCO_OUT} must be expressed in MHz.

With a modulation depth (md) = ±2 % (4 % peak to peak), and PLLN = 240 (in MHz):

$$INCSTEP = round[((2^{15} - 1) \times 2 \times 240)/(100 \times 5 \times 250)] = 126md(quantitazed)\%$$

An amplitude quantization error may be generated because the linear modulation profile is obtained by taking the quantized values (rounded to the nearest integer) of MODPER and INCSTEP. As a result, the achieved modulation depth is quantized. The percentage quantized modulation depth is given by the following formula:

$$md_{quantized}\% = (MODEPER \times INCSTEP \times 100 \times 5)/((2^{15} - 1) \times PLLN)$$

As a result:

$$md_{quantized}\% = (250 \times 126 \times 100 \times 5)/((2^{15} - 1) \times 240) = 2{,}002\%(peak)$$

Figure 28 and *Figure 29* show the main PLL output clock waveforms in center spread and down spread modes, where:

F0 is f_{PLL_OUT} nominal.

T_{mode} is the modulation period.

md is the modulation depth.

Figure 28. PLL output clock waveforms in center spread mode

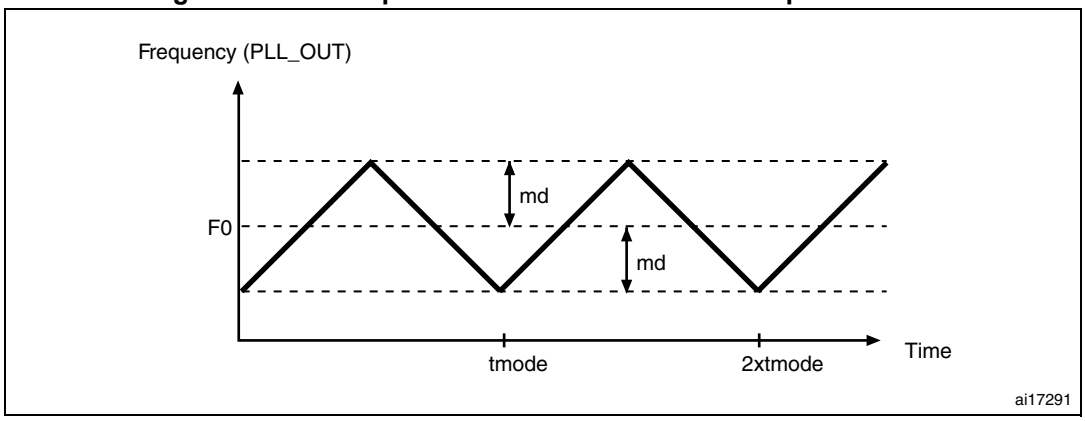

Figure 29. PLL output clock waveforms in down spread mode

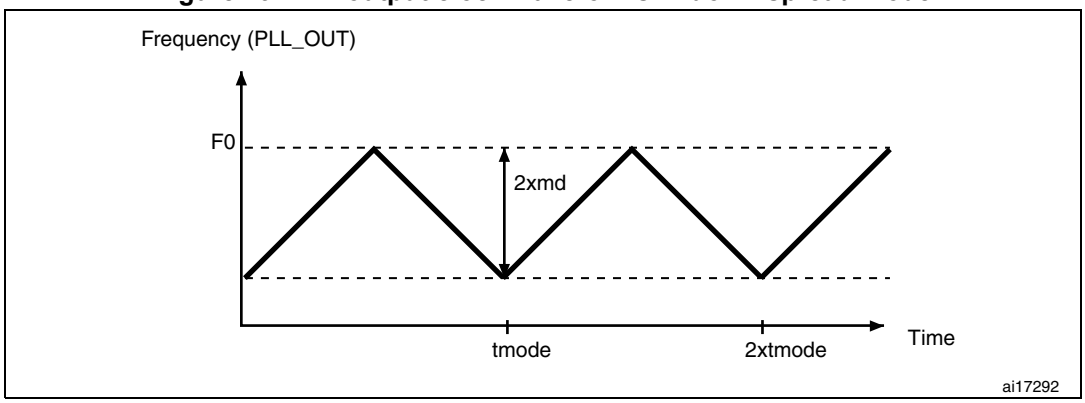

6.3.12 Memory characteristics

Flash memory

The characteristics are given at T_A = –40 to 105 °C unless otherwise specified.

The devices are shipped to customers with the Flash memory erased.

Table 44. Flash memory characteristics

Symbol	Parameter	Conditions	Min	Typ	Max	Unit
I_{DD}	Supply current	Write / Erase 8-bit mode, V_{DD} = 1.7 V	-	5	-	mA
		Write / Erase 16-bit mode, V_{DD} = 2.1 V	-	8	-	
		Write / Erase 32-bit mode, V_{DD} = 3.3 V	-	12	-	

Table 45. Flash memory programming

Symbol	Parameter	Conditions	Min(1)	Typ	Max(1)	Unit
t_{prog}	Word programming time	Program/erase parallelism (PSIZE) = x 8/16/32	-	16	100(2)	µs
$t_{ERASE16KB}$	Sector (16 KB) erase time	Program/erase parallelism (PSIZE) = x 8	-	400	800	ms
		Program/erase parallelism (PSIZE) = x 16	-	300	600	
		Program/erase parallelism (PSIZE) = x 32	-	250	500	
$t_{ERASE64KB}$	Sector (64 KB) erase time	Program/erase parallelism (PSIZE) = x 8	-	1200	2400	ms
		Program/erase parallelism (PSIZE) = x 16	-	700	1400	
		Program/erase parallelism (PSIZE) = x 32	-	550	1100	
$t_{ERASE128KB}$	Sector (128 KB) erase time	Program/erase parallelism (PSIZE) = x 8	-	2	4	s
		Program/erase parallelism (PSIZE) = x 16	-	1.3	2.6	
		Program/erase parallelism (PSIZE) = x 32	-	1	2	
t_{ME}	Mass erase time	Program/erase parallelism (PSIZE) = x 8	-	8	16	s
		Program/erase parallelism (PSIZE) = x 16	-	5.5	11	
		Program/erase parallelism (PSIZE) = x 32	-	4	8	
V_{prog}	Programming voltage	32-bit program operation	2.7	-	3.6	V
		16-bit program operation	2.1	-	3.6	V
		8-bit program operation	1.7	-	3.6	V

1. Guaranteed by characterization, not tested in production.
2. The maximum programming time is measured after 100K erase operations.

Table 46. Flash memory programming with V_{PP} voltage

Symbol	Parameter	Conditions	Min(1)	Typ	Max(1)	Unit
t_{prog}	Double word programming	T_A = 0 to +40 °C V_{DD} = 3.3 V V_{PP} = 8.5 V	-	16	100(2)	µs
$t_{ERASE16KB}$	Sector (16 KB) erase time		-	230	-	ms
$t_{ERASE64KB}$	Sector (64 KB) erase time		-	490	-	
$t_{ERASE128KB}$	Sector (128 KB) erase time		-	875	-	
t_{ME}	Mass erase time		-	1.750	-	s

Table 46. Flash memory programming with V_{PP} voltage (continued)

Symbol	Parameter	Conditions	Min(1)	Typ	Max(1)	Unit
V_{prog}	Programming voltage		2.7	-	3.6	V
V_{PP}	V_{PP} voltage range		7	-	9	V
I_{PP}	Minimum current sunk on the V_{PP} pin		10	-	-	mA
t_{VPP}(3)	Cumulative time during which V_{PP} is applied		-	-	1	hour

1. Guaranteed by design, not tested in production.
2. The maximum programming time is measured after 100K erase operations.
3. V_{PP} should only be connected during programming/erasing.

Table 47. Flash memory endurance and data retention

Symbol	Parameter	Conditions	Value	Unit
			Min(1)	
N_{END}	Endurance	T_A = –40 to +85 °C (6 suffix versions) T_A = –40 to +105 °C (7 suffix versions)	10	kcycles
t_{RET}	Data retention	1 kcycle(2) at T_A = 85 °C	30	Years
		1 kcycle(2) at T_A = 105 °C	10	
		10 kcycles(2) at T_A = 55 °C	20	

1. Guaranteed by characterization, not tested in production.
2. Cycling performed over the whole temperature range.

6.3.13 EMC characteristics

Susceptibility tests are performed on a sample basis during device characterization.

Functional EMS (electromagnetic susceptibility)

While a simple application is executed on the device (toggling 2 LEDs through I/O ports). the device is stressed by two electromagnetic events until a failure occurs. The failure is indicated by the LEDs:

- **Electrostatic discharge (ESD)** (positive and negative) is applied to all device pins until a functional disturbance occurs. This test is compliant with the IEC 61000-4-2 standard.
- **FTB**: A burst of fast transient voltage (positive and negative) is applied to V_{DD} and V_{SS} through a 100 pF capacitor, until a functional disturbance occurs. This test is compliant with the IEC 61000-4-4 standard.

A device reset allows normal operations to be resumed.

The test results are given in *Table 48*. They are based on the EMS levels and classes defined in application note AN1709.

Table 48. EMS characteristics for LQFP100 package

Symbol	Parameter	Conditions	Level/ Class
V_{FESD}	Voltage limits to be applied on any I/O pin to induce a functional disturbance	V_{DD} = 3.3 V, LQFP100, WLCSP49, T_A = +25 °C, f_{HCLK} = 84 MHz, conforms to IEC 61000-4-2	2B
V_{EFTB}	Fast transient voltage burst limits to be applied through 100 pF on V_{DD} and V_{SS} pins to induce a functional disturbance	V_{DD} = 3.3 V, LQFP100, WLCSP49, T_A = +25 °C, f_{HCLK} = 84 MHz, conforms to IEC 61000-4-4	4A

When the application is exposed to a noisy environment, it is recommended to avoid pin exposition to disturbances. The pins showing a middle range robustness are: PA0, PA1, PA2, on LQFP100 packages and PDR_ON on WLCSP49.

As a consequence, it is recommended to add a serial resistor (1 kΩ maximum) located as close as possible to the MCU to the pins exposed to noise (connected to tracks longer than 50 mm on PCB).

Designing hardened software to avoid noise problems

EMC characterization and optimization are performed at component level with a typical application environment and simplified MCU software. It should be noted that good EMC performance is highly dependent on the user application and the software in particular.

Therefore it is recommended that the user applies EMC software optimization and prequalification tests in relation with the EMC level requested for his application.

Software recommendations

The software flowchart must include the management of runaway conditions such as:

- Corrupted program counter
- Unexpected reset
- Critical Data corruption (control registers...)

Prequalification trials

Most of the common failures (unexpected reset and program counter corruption) can be reproduced by manually forcing a low state on the NRST pin or the Oscillator pins for 1 second.

To complete these trials, ESD stress can be applied directly on the device, over the range of specification values. When unexpected behavior is detected, the software can be hardened to prevent unrecoverable errors occurring (see application note AN1015).

Electromagnetic Interference (EMI)

The electromagnetic field emitted by the device are monitored while a simple application, executing EEMBC code, is running. This emission test is compliant with SAE IEC61967-2 standard which specifies the test board and the pin loading.

Table 49. EMI characteristics for WLCSP49

Symbol	Parameter	Conditions	Monitored frequency band	Max vs. [f_{HSE}/f_{CPU}]	Unit
				8/84 MHz	
S_{EMI}	Peak level	V_{DD} = 3.6 V, T_A = 25 °C, conforming to IEC61967-2	0.1 to 30 MHz	-4	dBµV
			30 to 130 MHz	-4	
			130 MHz to 1 GHz	-2	
			SAE EMI Level	1.5	-

Table 50. EMI characteristics for LQFP100

Symbol	Parameter	Conditions	Monitored frequency band	Max vs. [f_{HSE}/f_{CPU}]	Unit
				8/84 MHz	
S_{EMI}	Peak level	V_{DD} = 3.6 V, T_A = 25 °C, conforming to IEC61967-2	0.1 to 30 MHz	19	dBµV
			30 to 130 MHz	19	
			130 MHz to 1 GHz	11	
			SAE EMI Level	3.5	-

6.3.14 Absolute maximum ratings (electrical sensitivity)

Based on three different tests (ESD, LU) using specific measurement methods, the device is stressed in order to determine its performance in terms of electrical sensitivity.

Electrostatic discharge (ESD)

Electrostatic discharges (a positive then a negative pulse separated by 1 second) are applied to the pins of each sample according to each pin combination. The sample size depends on the number of supply pins in the device (3 parts × (n+1) supply pins). This test conforms to the JESD22-A114/C101 standard.

Table 51. ESD absolute maximum ratings

Symbol	Ratings	Conditions	Class	Maximum value(1)	Unit
$V_{ESD(HBM)}$	Electrostatic discharge voltage (human body model)	T_A = +25 °C conforming to JESD22-A114	2	2000	V
$V_{ESD(CDM)}$	Electrostatic discharge voltage (charge device model)	T_A = +25 °C conforming to ANSI/ESD STM5.3.1	II	400	

1. Guaranteed by characterization, not tested in production.

Static latchup

Two complementary static tests are required on six parts to assess the latchup performance:

- A supply overvoltage is applied to each power supply pin
- A current injection is applied to each input, output and configurable I/O pin

These tests are compliant with EIA/JESD 78A IC latchup standard.

Table 52. Electrical sensitivities

Symbol	Parameter	Conditions	Class
LU	Static latch-up class	T_A = +105 °C conforming to JESD78A	II level A

6.3.15 I/O current injection characteristics

As a general rule, current injection to the I/O pins, due to external voltage below V_{SS} or above V_{DD} (for standard, 3 V-capable I/O pins) should be avoided during normal product operation. However, in order to give an indication of the robustness of the microcontroller in cases when abnormal injection accidentally happens, susceptibility tests are performed on a sample basis during device characterization.

Functional susceptibilty to I/O current injection

While a simple application is executed on the device, the device is stressed by injecting current into the I/O pins programmed in floating input mode. While current is injected into the I/O pin, one at a time, the device is checked for functional failures.

The failure is indicated by an out of range parameter: ADC error above a certain limit (>5 LSB TUE), out of conventional limits of induced leakage current on adjacent pins (out of –5 µA/+0 µA range), or other functional failure (for example reset, oscillator frequency deviation).

Negative induced leakage current is caused by negative injection and positive induced leakage current by positive injection.

The test results are given in *Table 53*.

Table 53. I/O current injection susceptibility(1)

Symbol	Description	Functional susceptibility		Unit
		Negative injection	Positive injection	
I_{INJ}	Injected current on BOOT0 pin	–0	NA	mA
	Injected current on NRST pin	–0	NA	
	Injected current on PB3, PB4, PB5, PB6, PB7, PB8, PB9, PC13, PC14, PC15, PH1, PDR_ON, PC0, PC1,PC2, PC3, PD1, PD5, PD6, PD7, PE0, PE2, PE3, PE4, PE5, PE6	–0	NA	
	Injected current on any other FT pin	–5	NA	
	Injected current on any other pins	–5	+5	

1. NA = not applicable.

Note: It is recommended to add a Schottky diode (pin to ground) to analog pins which may potentially inject negative currents.

6.3.16 I/O port characteristics

General input/output characteristics

Unless otherwise specified, the parameters given in *Table 54* are derived from tests performed under the conditions summarized in *Table 14*. All I/Os are CMOS and TTL compliant.

Table 54. I/O static characteristics

Symbol	Parameter	Conditions	Min	Typ	Max	Unit
V_{IL}	FT, and NRST I/O input low level voltage	1.7 V≤ V_{DD}≤ 3.6 V	-	-	$0.35V_{DD}$–0.04(1)	V
					$0.3V_{DD}$(2)	
	BOOT0 I/O input low level voltage	1.75 V≤ V_{DD} ≤ 3.6 V, -40 °C≤ T_A ≤ 105 °C	-	-	$0.1V_{DD}$+0.1	
		1.7 V≤ V_{DD} ≤ 3.6 V, 0 °C≤ T_A ≤ 105 °C	-	-		
V_{IH}	FT and NRST I/O input high level voltage(5)	1.7 V≤ V_{DD}≤ 3.6 V	$0.45V_{DD}$+0.3(1)	-	-	V
			$0.4V_{DD}$(2)			
	BOOT0 I/O input high level voltage	1.75 V≤ V_{DD} ≤ 3.6 V, -40 °C≤ T_A ≤ 105 °C	$0.17V_{DD}$+0.7(1)	-	-	
		1.7 V≤ V_{DD} ≤ 3.6 V, 0 °C≤ T_A ≤ 105 °C				

Table 54. I/O static characteristics (continued)

Symbol	Parameter		Conditions	Min	Typ	Max	Unit
V_{HYS}	FT and NRST I/O input hysteresis		1.7 V≤ V_{DD}≤ 3.6 V	-	10% V_{DD} (3)	-	V
	BOOT0 I/O input hysteresis		1.75 V≤ V_{DD} ≤ 3.6 V, -40 °C≤ T_A ≤ 105 °C	-	100	-	mV
			1.7 V≤ V_{DD} ≤ 3.6 V, 0 °C≤ T_A ≤ 105 °C				
I_{lkg}	I/O input leakage current (4)		V_{SS} ≤ V_{IN} ≤ V_{DD}	-	-	±1	µA
	I/O FT input leakage current (5)		V_{IN} = 5 V	-	-	3	
R_{PU}	Weak pull-up equivalent resistor(6)	All pins except for PA10 (OTG_FS_ID)	V_{IN} = V_{SS}	30	40	50	kΩ
		PA10 (OTG_FS_ID)		7	10	14	
R_{PD}	Weak pull-down equivalent resistor(7)	All pins except for PA10 (OTG_FS_ID)	V_{IN} = V_{DD}	30	40	50	
		PA10 (OTG_FS_ID)		7	10	14	
C_{IO}(8)	I/O pin capacitance		-	-	5	-	pF

1. Guaranteed by design, not tested in production.
2. Guaranteed by test in production.
3. With a minimum of 200 mV.
4. Leakage could be higher than the maximum value, if negative current is injected on adjacent pins, Refer to *Table 53: I/O current injection susceptibility*
5. To sustain a voltage higher than VDD +0.3 V, the internal pull-up/pull-down resistors must be disabled. Leakage could be higher than the maximum value, if negative current is injected on adjacent pins.Refer to *Table 53: I/O current injection susceptibility*
6. Pull-up resistors are designed with a true resistance in series with a switchable PMOS. This PMOS contribution to the series resistance is minimum (~10% order).
7. Pull-down resistors are designed with a true resistance in series with a switchable NMOS. This NMOS contribution to the series resistance is minimum (~10% order).
8. Hysteresis voltage between Schmitt trigger switching levels. Guaranteed by characterization, not tested in production.

All I/Os are CMOS and TTL compliant (no software configuration required). Their characteristics cover more than the strict CMOS-technology or TTL parameters. The coverage of these requirements for FT I/Os is shown in *Figure 30*.

Figure 30. FT I/O input characteristics

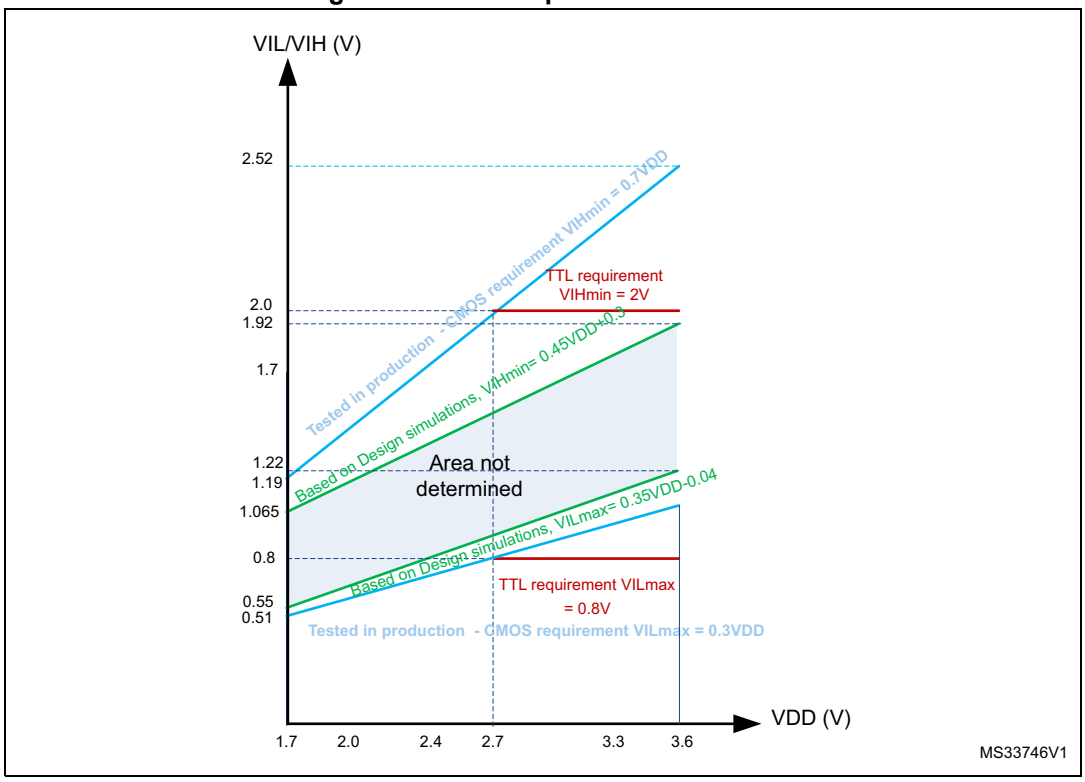

Output driving current

The GPIOs (general purpose input/outputs) can sink or source up to ±8 mA, and sink or source up to ±20 mA (with a relaxed V_{OL}/V_{OH}) except PC13, PC14 and PC15 which can sink or source up to ±3mA. When using the PC13 to PC15 GPIOs in output mode, the speed should not exceed 2 MHz with a maximum load of 30 pF.

In the user application, the number of I/O pins which can drive current must be limited to respect the absolute maximum rating specified in *Section 6.2*. In particular:

- The sum of the currents sourced by all the I/Os on $V_{DD,}$ plus the maximum Run consumption of the MCU sourced on $V_{DD,}$ cannot exceed the absolute maximum rating ΣI_{VDD} (see *Table 12*).
- The sum of the currents sunk by all the I/Os on V_{SS} plus the maximum Run consumption of the MCU sunk on V_{SS} cannot exceed the absolute maximum rating ΣI_{VSS} (see *Table 12*).

Output voltage levels

Unless otherwise specified, the parameters given in *Table 55* are derived from tests performed under ambient temperature and V_{DD} supply voltage conditions summarized in *Table 14*. All I/Os are CMOS and TTL compliant.

Table 55. Output voltage characteristics

Symbol	Parameter	Conditions	Min	Max	Unit
V_{OL}(1)	Output low level voltage for an I/O pin	CMOS port(2) I_{IO} = +8 mA 2.7 V ≤ V_{DD} ≤ 3.6 V	-	0.4	V
V_{OH}(3)	Output high level voltage for an I/O pin		V_{DD}–0.4	-	
V_{OL} (1)	Output low level voltage for an I/O pin	TTL port(2) I_{IO} =+8 mA 2.7 V ≤ V_{DD} ≤ 3.6 V	-	0.4	V
V_{OH} (3)	Output high level voltage for an I/O pin		2.4	-	
V_{OL}(1)	Output low level voltage for an I/O pin	I_{IO} = +20 mA 2.7 V ≤ V_{DD} ≤ 3.6 V	-	1.3(4)	V
V_{OH}(3)	Output high level voltage for an I/O pin		V_{DD}–1.3(4)	-	
V_{OL}(1)	Output low level voltage for an I/O pin	I_{IO} = +6 mA 1.8 V ≤ V_{DD} ≤ 3.6 V	-	0.4(4)	V
V_{OH}(3)	Output high level voltage for an I/O pin		V_{DD}–0.4(4)	-	
V_{OL}(1)	Output low level voltage for an I/O pin	I_{IO} = +4 mA 1.7 V ≤ V_{DD} ≤ 3.6 V	-	0.4(5)	V
V_{OH}(3)	Output high level voltage for an I/O pin		V_{DD}–0.4(5)	-	

1. The I_{IO} current sunk by the device must always respect the absolute maximum rating specified in *Table 12*. and the sum of I_{IO} (I/O ports and control pins) must not exceed I_{VSS}.
2. TTL and CMOS outputs are compatible with JEDEC standards JESD36 and JESD52.
3. The I_{IO} current sourced by the device must always respect the absolute maximum rating specified in *Table 12* and the sum of I_{IO} (I/O ports and control pins) must not exceed I_{VDD}.
4. Guaranteed by characterization results, not tested in production.
5. Guaranteed by design, not tested in production..

Input/output AC characteristics

The definition and values of input/output AC characteristics are given in *Figure 31* and , respectively.

Unless otherwise specified, the parameters given in *Table 56* are derived from tests performed under the ambient temperature and V_{DD} supply voltage conditions summarized in *Table 14*.

Table 56. I/O AC characteristics(1)(2)

OSPEEDRy [1:0] bit value(1)	Symbol	Parameter	Conditions	Min	Typ	Max	Unit
00	$f_{max(IO)out}$	Maximum frequency(3)	C_L = 50 pF, V_{DD} ≥ 2.70 V	-	-	4	MHz
			C_L = 50 pF, V_{DD}≥ 1.7 V	-	-	2	
			C_L = 10 pF, V_{DD} ≥ 2.70 V	-	-	8	
			C_L = 10 pF, V_{DD} ≥ 1.7 V	-	-	4	
	$t_{f(IO)out}$/ $t_{r(IO)out}$	Output high to low level fall time and output low to high level rise time	C_L = 50 pF, V_{DD} = 1.7 V to 3.6 V	-	-	100	ns

Table 56. I/O AC characteristics(1)(2) (continued)

OSPEEDRy [1:0] bit value(1)	Symbol	Parameter	Conditions	Min	Typ	Max	Unit
01	$f_{max(IO)out}$	Maximum frequency(3)	C_L = 50 pF, $V_{DD} \geq$ 2.70 V	-	-	25	MHz
			C_L = 50 pF, $V_{DD} \geq$ 1.7 V	-	-	12.5	
			C_L = 10 pF, $V_{DD} \geq$ 2.70 V	-	-	50	
			C_L = 10 pF, $V_{DD} \geq$ 1.7 V	-	-	20	
	$t_{f(IO)out}$/ $t_{r(IO)out}$	Output high to low level fall time and output low to high level rise time	C_L = 50 pF, $V_{DD} \geq$2.7 V	-	-	10	ns
			C_L = 50 pF, $V_{DD} \geq$ 1.7 V	-	-	20	
			C_L = 10 pF, $V_{DD} \geq$ 2.70 V	-	-	6	
			C_L = 10 pF, $V_{DD} \geq$ 1.7 V	-	-	10	
10	$f_{max(IO)out}$	Maximum frequency(3)	C_L = 40 pF, $V_{DD} \geq$ 2.70 V	-	-	50(4)	MHz
			C_L = 40 pF, $V_{DD} \geq$ 1.7 V	-	-	25	
			C_L = 10 pF, $V_{DD} \geq$ 2.70 V	-	-	100(4)	
			C_L = 10 pF, $V_{DD} \geq$ 1.7 V	-	-	50(4)	
	$t_{f(IO)out}$/ $t_{r(IO)out}$	Output high to low level fall time and output low to high level rise time	C_L = 40 pF, $V_{DD} \geq$ 2.70 V	-	-	6	ns
			C_L = 40 pF, $V_{DD} \geq$ 1.7 V	-	-	10	
			C_L = 10 pF, $V_{DD} \geq$ 2.70 V	-	-	4	
			C_L = 10 pF, $V_{DD} \geq$ 1.7 V	-	-	6	
11	$F_{max(IO)out}$	Maximum frequency(3)	C_L = 30 pF, $V_{DD} \geq$ 2.70 V	-	-	100(4)	MHz
			C_L = 30 pF, $V_{DD} \geq$ 1.7 V	-	-	50(4)	
			C_L = 10 pF, $V_{DD} \geq$ 2.70 V	-	-	180(4)	
			C_L = 10 pF, $V_{DD} \geq$ 1.7 V	-	-	100(4)	
	$t_{f(IO)out}$/ $t_{r(IO)out}$	Output high to low level fall time and output low to high level rise time	C_L = 30 pF, $V_{DD} \geq$ 2.70 V	-	-	4	ns
			C_L = 30 pF, $V_{DD} \geq$ 1.7 V	-	-	6	
			C_L = 10 pF, $V_{DD} \geq$ 2.70 V	-	-	2.5	
			C_L = 10 pF, $V_{DD} \geq$ 1.7 V	-	-	4	
-	t_{EXTIpw}	Pulse width of external signals detected by the EXTI controller		10	-	-	ns

1. Guaranteed by characterization, not tested in production.
2. The I/O speed is configured using the OSPEEDRy[1:0] bits. Refer to the STM32F4xx reference manual for a description of the GPIOx_SPEEDR GPIO port output speed register.
3. The maximum frequency is defined in *Figure 31*.
4. For maximum frequencies above 50 MHz and V_{DD} > 2.4 V, the compensation cell should be used.

Figure 31. I/O AC characteristics definition

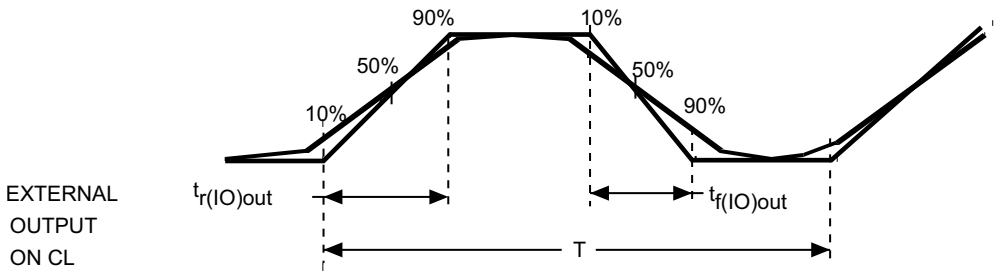

Maximum frequency is achieved if ($t_r + t_f$) ≤ (2/3)T and if the duty cycle is (45-55%) when loaded by CL specified in the table " *I/O AC characteristics*".

ai14131d

6.3.17 NRST pin characteristics

The NRST pin input driver uses CMOS technology. It is connected to a permanent pull-up resistor, R_{PU} (see *Table 54*).

Unless otherwise specified, the parameters given in *Table 57* are derived from tests performed under the ambient temperature and V_{DD} supply voltage conditions summarized in *Table 14*. Refer to *Table 54: I/O static characteristics* for the values of VIH and VIL for NRST pin.

Table 57. NRST pin characteristics

Symbol	Parameter	Conditions	Min	Typ	Max	Unit
R_{PU}	Weak pull-up equivalent resistor(1)	$V_{IN} = V_{SS}$	30	40	50	kΩ
$V_{F(NRST)}$(2)	NRST Input filtered pulse		-	-	100	ns
$V_{NF(NRST)}$(2)	NRST Input not filtered pulse	V_{DD} > 2.7 V	300	-	-	ns
T_{NRST_OUT}	Generated reset pulse duration	Internal Reset source	20	-	-	µs

1. The pull-up is designed with a true resistance in series with a switchable PMOS. This PMOS contribution to the series resistance must be minimum (~10% order).
2. Guaranteed by design, not tested in production.

Figure 32. Recommended NRST pin protection

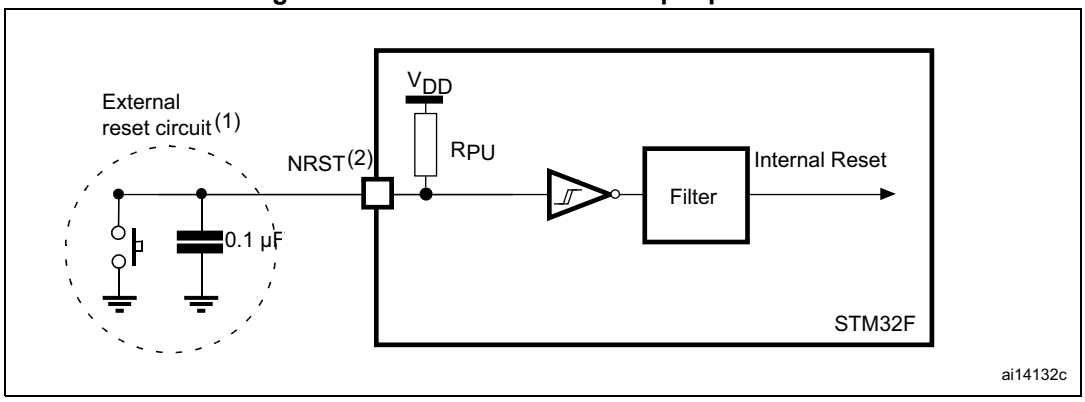

1. The reset network protects the device against parasitic resets.
2. The user must ensure that the level on the NRST pin can go below the $V_{IL(NRST)}$ max level specified in *Table 57*. Otherwise the reset is not taken into account by the device.

6.3.18 TIM timer characteristics

The parameters given in *Table 58* are guaranteed by design.

Refer to *Section 6.3.16: I/O port characteristics* for details on the input/output alternate function characteristics (output compare, input capture, external clock, PWM output).

Table 58. TIMx characteristics(1)(2)

Symbol	Parameter	Conditions(3)	Min	Max	Unit
$t_{res(TIM)}$	Timer resolution time	AHB/APBx prescaler=1 or 2 or 4, $f_{TIMxCLK}$ = 84 MHz	1	-	$t_{TIMxCLK}$
			11.9	-	ns
		AHB/APBx prescaler>4, $f_{TIMxCLK}$ = 84 MHz	1	-	$t_{TIMxCLK}$
			11.9	-	ns
f_{EXT}	Timer external clock frequency on CH1 to CH4	$f_{TIMxCLK}$ = 84 MHz	0	$f_{TIMxCLK}/2$	MHz
			0	42	MHz
Res_{TIM}	Timer resolution		-	16/32	bit
$t_{COUNTER}$	16-bit counter clock period when internal clock is selected	$f_{TIMxCLK}$ = 84 MHz	0.0119	780	µs
t_{MAX_COUNT}	Maximum possible count with 32-bit counter		-	65536 × 65536	$t_{TIMxCLK}$
		$f_{TIMxCLK}$ = 84 MHz	-	51.1	S

1. TIMx is used as a general term to refer to the TIM1 to TIM11 timers.
2. Guaranteed by design, not tested in production.
3. The maximum timer frequency on APB1 is 42 MHz and on APB2 is up to 84 MHz, by setting the TIMPRE bit in the RCC_DCKCFGR register, if APBx prescaler is 1 or 2 or 4, then TIMxCLK = HCKL, otherwise TIMxCLK >= 4x PCLKx.

6.3.19 Communications interfaces

I²C interface characteristics

The I2C interface meets the requirements of the standard I²C communication protocol with the following restrictions: the I/O pins SDA and SCL are mapped to are not “true” open-drain. When configured as open-drain, the PMOS connected between the I/O pin and VDD is disabled, but is still present.

The I²C characteristics are described in *Table59*. Refer also to *Section 6.3.16: I/O port characteristics* for more details on the input/output alternate function characteristics (SDA and SCL).

The I²C bus interface supports standard mode (up to 100 kHz) and fast mode (up to 400 kHz). The I2C bus frequency can be increased up to 1 MHz. For more details about the complete solution, please contact your local ST sales representative.

Table 59. I²C characteristics

Symbol	Parameter	Standard mode I²C(1)		Fast mode I²C(1)(2)		Unit
		Min	Max	Min	Max	
$t_{w(SCLL)}$	SCL clock low time	4.7	-	1.3	-	µs
$t_{w(SCLH)}$	SCL clock high time	4.0	-	0.6	-	
$t_{su(SDA)}$	SDA setup time	250	-	100	-	ns
$t_{h(SDA)}$	SDA data hold time	0	-	0	900(3)	
$t_{r(SDA)}$ $t_{r(SCL)}$	SDA and SCL rise time	-	1000		300	
$t_{f(SDA)}$ $t_{f(SCL)}$	SDA and SCL fall time	-	300	-	300	
$t_{h(STA)}$	Start condition hold time	4.0	-	0.6	-	µs
$t_{su(STA)}$	Repeated Start condition setup time	4.7	-	0.6	-	
$t_{su(STO)}$	Stop condition setup time	4.0	-	0.6	-	µs
$t_{w(STO:STA)}$	Stop to Start condition time (bus free)	4.7	-	1.3	-	µs
C_b	Capacitive load for each bus line	-	400	-	400	pF

1. Guaranteed by design, not tested in production.
2. f_{PCLK1} must be at least 2 MHz to achieve standard mode I²C frequencies. It must be at least 4 MHz to achieve fast mode I²C frequencies, and a multiple of 10 MHz to reach the 400 kHz maximum I²C fast mode clock.
3. The maximum data hold time has only to be met if the interface does not stretch the low period of SCL signal.

Figure 33. I²C bus AC waveforms and measurement circuit

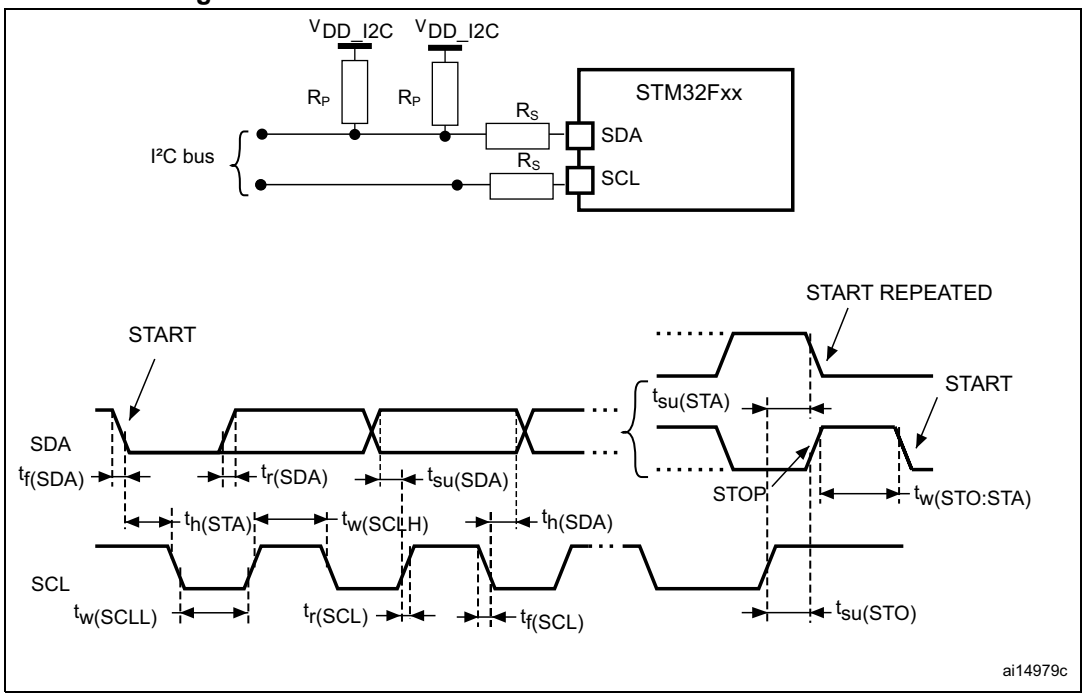

1. R_S = series protection resistor.
2. R_P = external pull-up resistor.
3. V_{DD_I2C} is the I2C bus power supply.

Table 60. SCL frequency (f_{PCLK1}= 42 MHz, V_{DD} = V_{DD_I2C} = 3.3 V)(1)(2)

f_{SCL} (kHz)	I2C_CCR value
	R_P = 4.7 kΩ
400	0x8019
300	0x8021
200	0x8032
100	0x0096
50	0x012C
20	0x02EE

1. R_P = External pull-up resistance, f_{SCL} = I²C speed
2. For speeds around 200 kHz, the tolerance on the achieved speed is of ±5%. For other speed ranges, the tolerance on the achieved speed is ±2%. These variations depend on the accuracy of the external components used to design the application.

SPI interface characteristics

Unless otherwise specified, the parameters given in *Table 61* for the SPI interface are derived from tests performed under the ambient temperature, f_{PCLKx} frequency and V_{DD} supply voltage conditions summarized in *Table 14*, with the following configuration:

- Output speed is set to OSPEEDRy[1:0] = 10
- Capacitive load C = 30 pF
- Measurement points are done at CMOS levels: $0.5V_{DD}$

Refer to *Section 6.3.16: I/O port characteristics* for more details on the input/output alternate function characteristics (NSS, SCK, MOSI, MISO for SPI).

Table 61. SPI dynamic characteristics(1)

Symbol	Parameter	Conditions	Min	Typ	Max	Unit
f_{SCK} $1/t_{c(SCK)}$	SPI clock frequency	Master mode, SPI1/4, 2.7 V < V_{DD} < 3.6 V	-	-	42	MHz
		Slave mode, SPI1/4, 2.7 V < V_{DD} < 3.6 V			42	
		Slave transmitter/full-duplex mode, SPI1/4, 2.7 V < V_{DD} < 3.6 V			38(2)	
		Master mode, SPI1/2/3/4, 1.7 V < V_{DD} < 3.6 V			21	
		Slave mode, SPI1/2/3/4, 1.7 V < V_{DD} < 3.6 V			21	
Duty(SCK)	Duty cycle of SPI clock frequency	Slave mode	30	50	70	%
$t_{w(SCKH)}$ $t_{w(SCKL)}$	SCK high and low time	Master mode, SPI presc = 2	T_{PCLK}–1.5	T_{PCLK}	T_{PCLK}+1.5	ns
$t_{su(NSS)}$	NSS setup time	Slave mode, SPI presc = 2	$4T_{PCLK}$	-	-	ns
$t_{h(NSS)}$	NSS hold time	Slave mode, SPI presc = 2	$2T_{PCLK}$	-	-	ns
$t_{su(MI)}$	Data input setup time	Master mode	0	-	-	ns
$t_{su(SI)}$		Slave mode	2.5	-	-	ns
$t_{h(MI)}$	Data input hold time	Master mode	6	-	-	ns
$t_{h(SI)}$		Slave mode	2.5	-	-	ns
$t_{a(SO)}$	Data output access time	Slave mode	9	-	20	ns
$t_{dis(SO)}$	Data output disable time	Slave mode	8	-	13	ns
$t_{v(SO)}$	Data output valid time	Slave mode (after enable edge), 2.7 V < V_{DD} < 3.6 V	-	9.5	13	ns
		Slave mode (after enable edge), 1.7 V < V_{DD} < 3.6 V	-	9.5	17	ns
$t_{h(SO)}$	Data output hold time	Slave mode (after enable edge), 2.7 V < V_{DD} < 3.6 V	5.5	-	-	ns
		Slave mode (after enable edge), 1.7 V < V_{DD} < 3.6 V	3.5	-	-	ns

Table 61. SPI dynamic characteristics(1) (continued)

Symbol	Parameter	Conditions	Min	Typ	Max	Unit
$t_{v(MO)}$	Data output valid time	Master mode (after enable edge)	-	3	5	ns
$t_{h(MO)}$	Data output hold time	Master mode (after enable edge)	2	-	-	ns

1. Guaranteed by characterization, not tested in production.
2. Maximum frequency in Slave transmitter mode is determined by the sum of $t_{v(SO)}$ and $t_{su(MI)}$ which has to fit into SCK low or high phase preceding the SCK sampling edge. This value can be achieved when the SPI communicates with a master having $t_{su(MI)}$ = 0 while Duty(SCK) = 50%

Figure 34. SPI timing diagram - slave mode and CPHA = 0

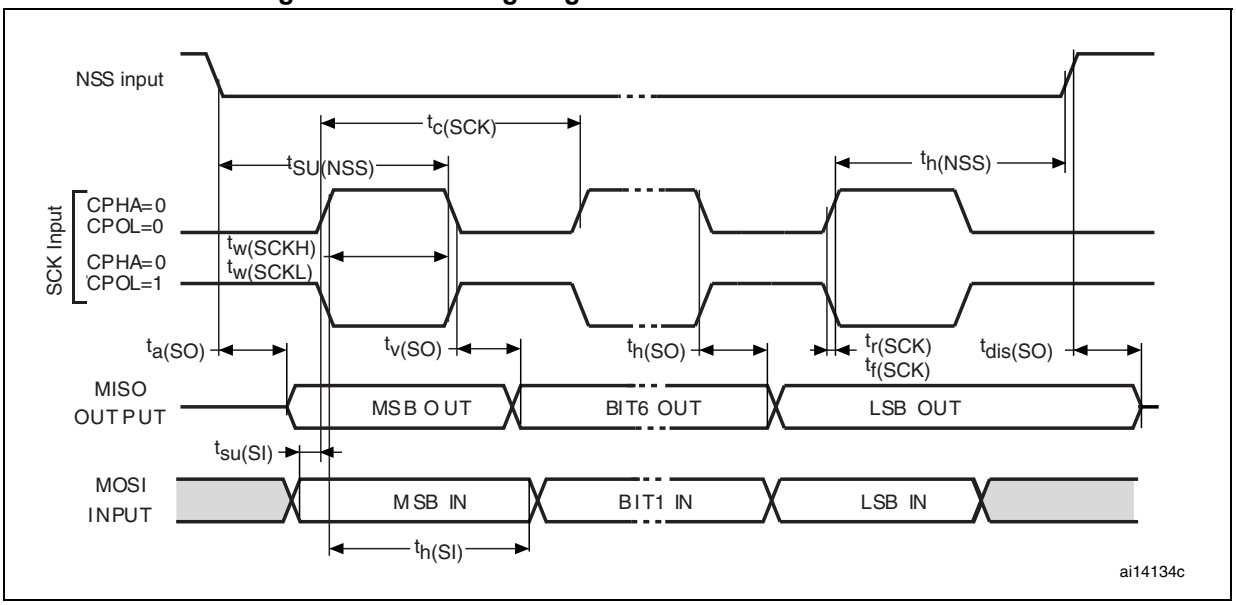

Figure 35. SPI timing diagram - slave mode and CPHA = 1(1)

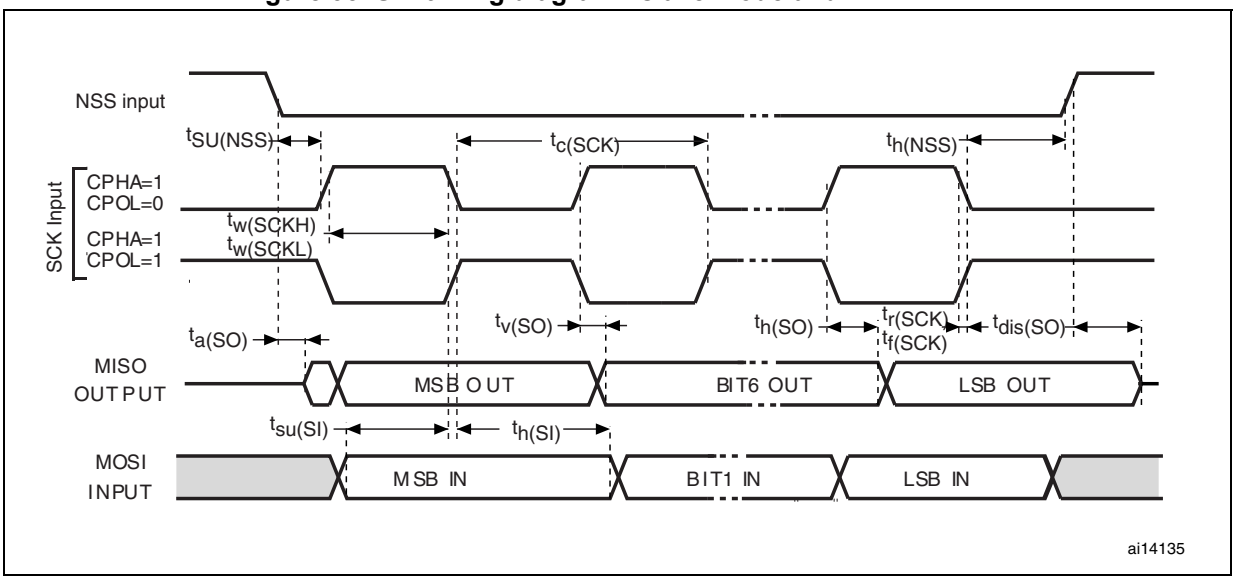

Figure 36. SPI timing diagram - master mode(1)

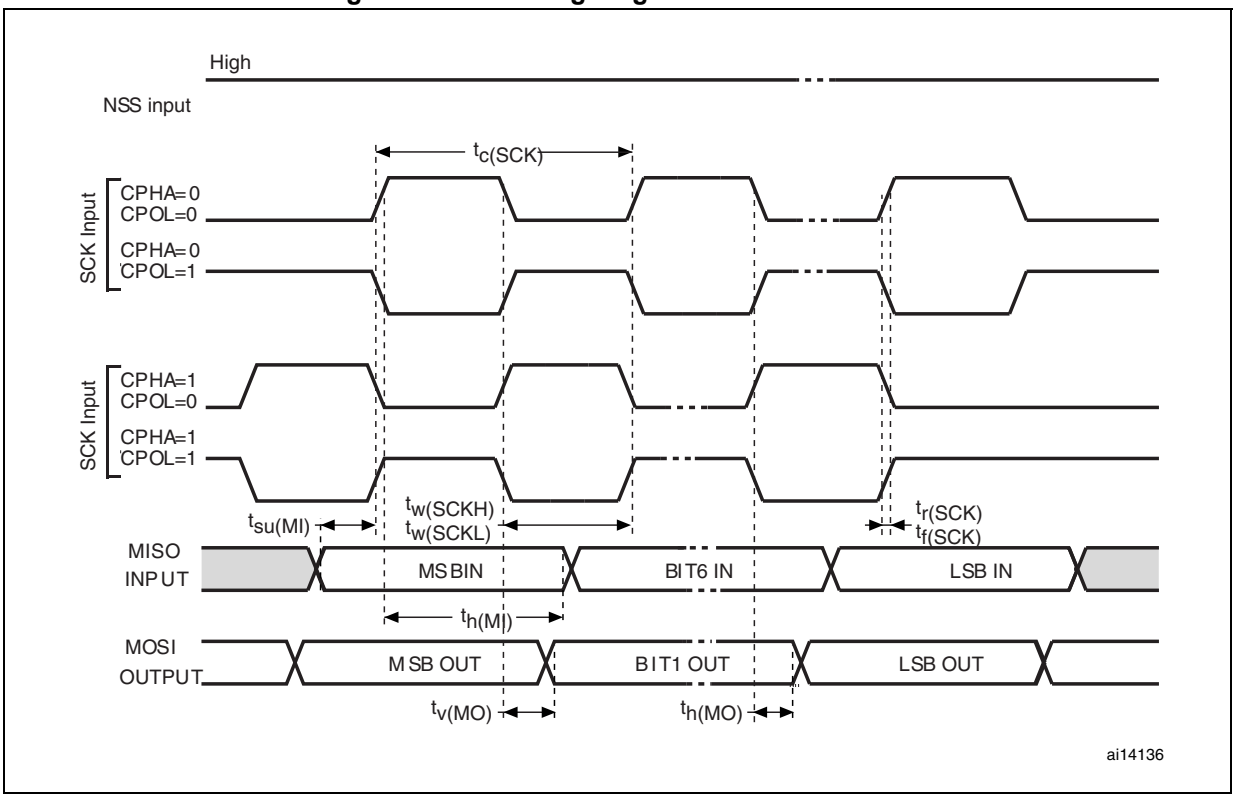

I^2S interface characteristics

Unless otherwise specified, the parameters given in *Table 62* for the I^2S interface are derived from tests performed under the ambient temperature, f_{PCLKx} frequency and V_{DD} supply voltage conditions summarized in *Table 14*, with the following configuration:

- Output speed is set to OSPEEDRy[1:0] = 10
- Capacitive load C = 30 pF
- Measurement points are done at CMOS levels: $0.5V_{DD}$

Refer to *Section 6.3.16: I/O port characteristics* for more details on the input/output alternate function characteristics (CK, SD, WS).

Table 62. I^2S dynamic characteristics(1)

Symbol	Parameter	Conditions	Min	Max	Unit
f_{MCK}	I2S Main clock output	-	256x8K	256xFs(2)	MHz
f_{CK}	I2S clock frequency	Master data: 32 bits	-	64xFs	MHz
		Slave data: 32 bits	-	64xFs	
D_{CK}	I2S clock frequency duty cycle	Slave receiver	30	70	%
$t_{v(WS)}$	WS valid time	Master mode	0	6	ns
$t_{h(WS)}$	WS hold time	Master mode	0	-	
$t_{su(WS)}$	WS setup time	Slave mode	1	-	
$t_{h(WS)}$	WS hold time	Slave mode	0	-	
$t_{su(SD\_MR)}$	Data input setup time	Master receiver	7.5	-	
$t_{su(SD\_SR)}$		Slave receiver	2	-	
$t_{h(SD\_MR)}$	Data input hold time	Master receiver	0	-	
$t_{h(SD\_SR)}$		Slave receiver	0	-	
$t_{v(SD\_ST)}$ $t_{h(SD\_ST)}$	Data output valid time	Slave transmitter (after enable edge)	-	27	
$t_{v(SD\_MT)}$		Master transmitter (after enable edge)	-	20	
$t_{h(SD\_MT)}$	Data output hold time	Master transmitter (after enable edge)	2.5	-	

1. Guaranteed by characterization, not tested in production.
2. The maximum value of 256xFs is 42 MHz (APB1 maximum frequency).

Note: Refer to the I2S section of the reference manual for more details on the sampling frequency (F_S).

*f_{MCK}, f_{CK}, and D_{CK} values reflect only the digital peripheral behavior. The values of these parameters might be slightly impacted by the source clock precision. D_{CK} depends mainly on the value of ODD bit. The digital contribution leads to a minimum value of (I2SDIV/(2*I2SDIV+ODD) and a maximum value of (I2SDIV+ODD)/(2*I2SDIV+ODD). F_S maximum value is supported for each mode/condition.*

Figure 37. I²S slave timing diagram (Philips protocol)(1)

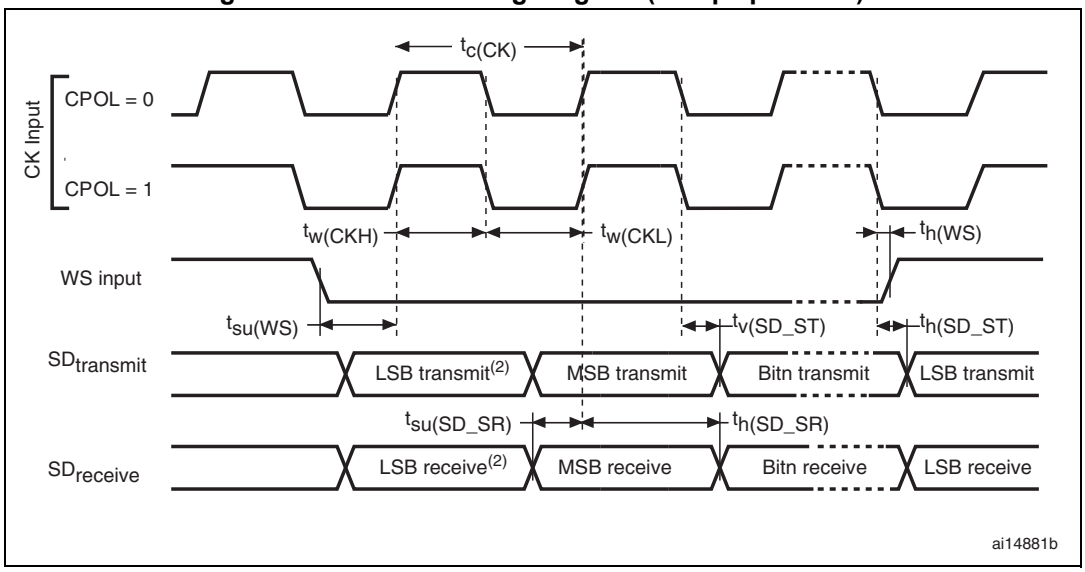

1. LSB transmit/receive of the previously transmitted byte. No LSB transmit/receive is sent before the first byte.

Figure 38. I²S master timing diagram (Philips protocol)(1)

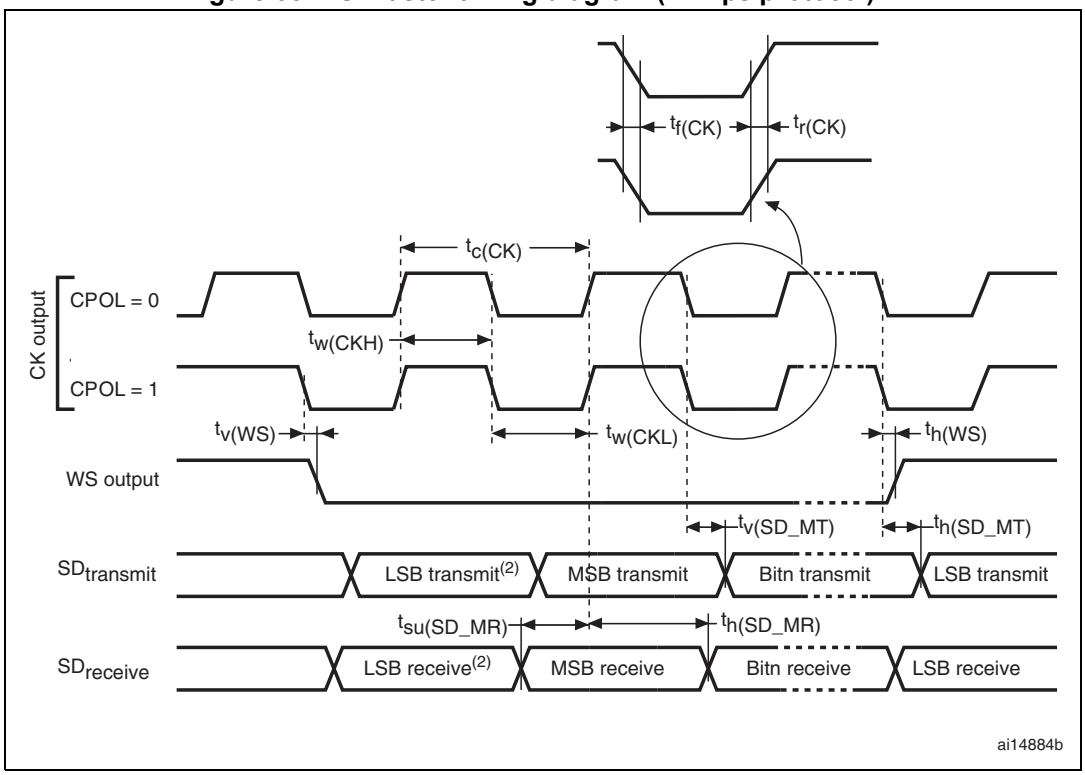

1. LSB transmit/receive of the previously transmitted byte. No LSB transmit/receive is sent before the first byte.

USB OTG full speed (FS) characteristics

This interface is present in USB OTG FS controller.

Table 63. USB OTG FS startup time

Symbol	Parameter	Max	Unit
$t_{STARTUP}$(1)	USB OTG FS transceiver startup time	1	µs

1. Guaranteed by design, not tested in production.

Table 64. USB OTG FS DC electrical characteristics

Symbol		Parameter	Conditions	Min.(1)	Typ.	Max.(1)	Unit
Input levels	V_{DD}	USB OTG FS operating voltage		3.0(2)	-	3.6	V
	V_{DI}(3)	Differential input sensitivity	I(USB_FS_DP/DM)	0.2	-	-	V
	V_{CM}(3)	Differential common mode range	Includes V_{DI} range	0.8	-	2.5	
	V_{SE}(3)	Single ended receiver threshold		1.3	-	2.0	
Output levels	V_{OL}	Static output level low	R_L of 1.5 kΩ to 3.6 V(4)	-	-	0.3	V
	V_{OH}	Static output level high	R_L of 15 kΩ to V_{SS}(4)	2.8	-	3.6	
R_{PD}		PA11, PA12 (USB_FS_DM/DP)	$V_{IN} = V_{DD}$	17	21	24	kΩ
		PA9 (OTG_FS_VBUS)		0.65	1.1	2.0	
R_{PU}		PA11, PA12 (USB_FS_DM/DP)	$V_{IN} = V_{SS}$	1.5	1.8	2.1	
		PA9 (OTG_FS_VBUS)	$V_{IN} = V_{SS}$	0.25	0.37	0.55	

1. All the voltages are measured from the local ground potential.
2. The USB OTG FS functionality is ensured down to 2.7 V but not the full USB full speed electrical characteristics which are degraded in the 2.7-to-3.0 V V_{DD} voltage range.
3. Guaranteed by design, not tested in production.
4. R_L is the load connected on the USB OTG FS drivers.

Note: When VBUS sensing feature is enabled, PA9 should be left at their default state (floating input), not as alternate function. A typical 200 µA current consumption of the embedded sensing block (current to voltage conversion to determine the different sessions) can be observed on PA9 when the feature is enabled.

Figure 39. USB OTG FS timings: definition of data signal rise and fall time

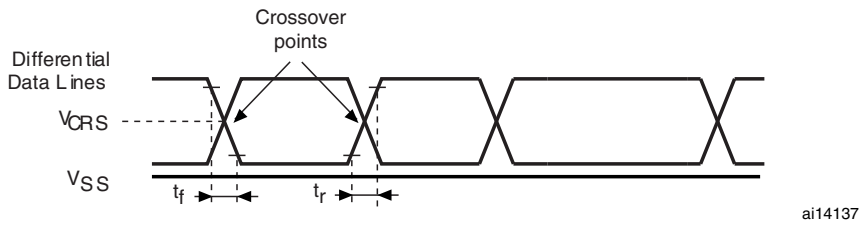

Table 65. USB OTG FS electrical characteristics(1)

Driver characteristics					
Symbol	**Parameter**	**Conditions**	**Min**	**Max**	**Unit**
t_r	Rise time(2)	C_L = 50 pF	4	20	ns
t_f	Fall time(2)	C_L = 50 pF	4	20	ns
t_{rfm}	Rise/ fall time matching	t_r/t_f	90	110	%
V_{CRS}	Output signal crossover voltage		1.3	2.0	V

1. Guaranteed by design, not tested in production.
2. Measured from 10% to 90% of the data signal. For more detailed informations, please refer to USB Specification - Chapter 7 (version 2.0).

6.3.20 12-bit ADC characteristics

Unless otherwise specified, the parameters given in *Table 66* are derived from tests performed under the ambient temperature, f_{PCLK2} frequency and V_{DDA} supply voltage conditions summarized in *Table 14*.

Table 66. ADC characteristics

Symbol	Parameter	Conditions	Min	Typ	Max	Unit
V_{DDA}	Power supply	$V_{DDA} - V_{REF+} < 1.2$ V	1.7(1)	-	3.6	V
V_{REF+}	Positive reference voltage		1.7(1)	-	V_{DDA}	V
f_{ADC}	ADC clock frequency	V_{DDA} = 1.7(1) to 2.4 V	0.6	15	18	MHz
		V_{DDA} = 2.4 to 3.6 V	0.6	30	36	MHz
f_{TRIG}(2)	External trigger frequency	f_{ADC} = 30 MHz, 12-bit resolution	-	-	1764	kHz
			-	-	17	$1/f_{ADC}$
V_{AIN}	Conversion voltage range(3)		0 (V_{SSA} or V_{REF-} tied to ground)	-	V_{REF+}	V
R_{AIN}(2)	External input impedance	See *Equation 1* for details	-	-	50	kΩ
R_{ADC}(2)(4)	Sampling switch resistance		-	-	6	kΩ
C_{ADC}(2)	Internal sample and hold capacitor		-	4	7	pF

Table 66. ADC characteristics (continued)

Symbol	Parameter	Conditions	Min	Typ	Max	Unit
t_{lat}(2)	Injection trigger conversion latency	f_{ADC} = 30 MHz	-	-	0.100	µs
			-	-	3(5)	$1/f_{ADC}$
t_{latr}(2)	Regular trigger conversion latency	f_{ADC} = 30 MHz	-	-	0.067	µs
			-	-	2(5)	$1/f_{ADC}$
t_S(2)	Sampling time	f_{ADC} = 30 MHz	0.100	-	16	µs
			3	-	480	$1/f_{ADC}$
t_{STAB}(2)	Power-up time		-	2	3	µs
t_{CONV}(2)	Total conversion time (including sampling time)	f_{ADC} = 30 MHz 12-bit resolution	0.50	-	16.40	µs
		f_{ADC} = 30 MHz 10-bit resolution	0.43	-	16.34	µs
		f_{ADC} = 30 MHz 8-bit resolution	0.37	-	16.27	µs
		f_{ADC} = 30 MHz 6-bit resolution	0.30	-	16.20	µs
		9 to 492 (t_S for sampling +n-bit resolution for successive approximation)				$1/f_{ADC}$
f_S(2)	Sampling rate (f_{ADC} = 30 MHz, and t_S = 3 ADC cycles)	12-bit resolution Single ADC	-	-	2	Msps
		12-bit resolution Interleave Dual ADC mode	-	-	3.75	Msps
		12-bit resolution Interleave Triple ADC mode	-	-	6	Msps
I_{VREF+}(2)	ADC V_{REF} DC current consumption in conversion mode		-	300	500	µA
I_{VDDA}(2)	ADC V_{DDA} DC current consumption in conversion mode		-	1.6	1.8	mA

1. V_{DDA} minimum value of 1.7 V is possible with the use of an external power supply supervisor (refer to *Section 3.14.2: Internal reset OFF*).
2. Guaranteed by characterization, not tested in production.
3. V_{REF+} is internally connected to V_{DDA} and V_{REF-} is internally connected to V_{SSA}.
4. R_{ADC} maximum value is given for V_{DD}=1.7 V, and minimum value for V_{DD}=3.3 V.
5. For external triggers, a delay of $1/f_{PCLK2}$ must be added to the latency specified in *Table 66*.

Equation 1: R_{AIN} max formula

$$R_{AIN} = \frac{(k - 0,5)}{f_{ADC} \times C_{ADC} \times \ln(2^{N+2})} - R_{ADC}$$

The formula above (*Equation 1*) is used to determine the maximum external impedance allowed for an error below 1/4 of LSB. N = 12 (from 12-bit resolution) and k is the number of sampling periods defined in the ADC_SMPR1 register.

Table 67. ADC accuracy at f_{ADC} = 18 MHz(1)

Symbol	Parameter	Test conditions	Typ	Max(2)	Unit
ET	Total unadjusted error	f_{ADC} =18 MHz V_{DDA} = 1.7 to 3.6 V V_{REF} = 1.7 to 3.6 V $V_{DDA} - V_{REF}$ < 1.2 V	±3	±4	LSB
EO	Offset error		±2	±3	
EG	Gain error		±1	±3	
ED	Differential linearity error		±1	±2	
EL	Integral linearity error		±2	±3	

1. Better performance could be achieved in restricted V_{DD}, frequency and temperature ranges.
2. Guaranteed by characterization, not tested in production.

Table 68. ADC accuracy at f_{ADC} = 30 MHz(1)

Symbol	Parameter	Test conditions	Typ	Max(2)	Unit
ET	Total unadjusted error	f_{ADC} = 30 MHz, R_{AIN} < 10 kΩ, V_{DDA} = 2.4 to 3.6 V, V_{REF} = 1.7 to 3.6 V, $V_{DDA} - V_{REF}$ < 1.2 V	±2	±5	LSB
EO	Offset error		±1.5	±2.5	
EG	Gain error		±1.5	±4	
ED	Differential linearity error		±1	±2	
EL	Integral linearity error		±1.5	±3	

1. Better performance could be achieved in restricted V_{DD}, frequency and temperature ranges.
2. Guaranteed by characterization, not tested in production.

Table 69. ADC accuracy at f_{ADC} = 36 MHz(1)

Symbol	Parameter	Test conditions	Typ	Max(2)	Unit
ET	Total unadjusted error	f_{ADC} =36 MHz, V_{DDA} = 2.4 to 3.6 V, V_{REF} = 1.7 to 3.6 V $V_{DDA} - V_{REF}$ < 1.2 V	±4	±7	LSB
EO	Offset error		±2	±3	
EG	Gain error		±3	±6	
ED	Differential linearity error		±2	±3	
EL	Integral linearity error		±3	±6	

1. Better performance could be achieved in restricted V_{DD}, frequency and temperature ranges.
2. Guaranteed by characterization, not tested in production.

Table 70. ADC dynamic accuracy at f_{ADC} = 18 MHz - limited test conditions(1)

Symbol	Parameter	Test conditions	Min	Typ	Max	Unit
ENOB	Effective number of bits	f_{ADC} =18 MHz V_{DDA} = V_{REF+}= 1.7 V Input Frequency = 20 KHz Temperature = 25 °C	10.3	10.4	-	bits
SINAD	Signal-to-noise and distortion ratio		64	64.2	-	dB
SNR	Signal-to-noise ratio		64	65	-	
THD	Total harmonic distortion		-67	-72	-	

1. Guaranteed by characterization, not tested in production.

Table 71. ADC dynamic accuracy at f_{ADC} = 36 MHz - limited test conditions(1)

Symbol	Parameter	Test conditions	Min	Typ	Max	Unit
ENOB	Effective number of bits	f_{ADC} = 36 MHz V_{DDA} = V_{REF+} = 3.3 V Input Frequency = 20 KHz Temperature = 25 °C	10.6	10.8	-	bits
SINAD	Signal-to noise and distortion ratio		66	67	-	dB
SNR	Signal-to noise ratio		64	68	-	
THD	Total harmonic distortion		-70	-72	-	

1. Guaranteed by characterization, not tested in production.

Note: ADC accuracy vs. negative injection current: injecting a negative current on any analog input pins should be avoided as this significantly reduces the accuracy of the conversion being performed on another analog input. It is recommended to add a Schottky diode (pin to ground) to analog pins which may potentially inject negative currents.

Any positive injection current within the limits specified for $I_{INJ(PIN)}$ and $\Sigma I_{INJ(PIN)}$ in *Section 6.3.16* does not affect the ADC accuracy.

Figure 40. ADC accuracy characteristics

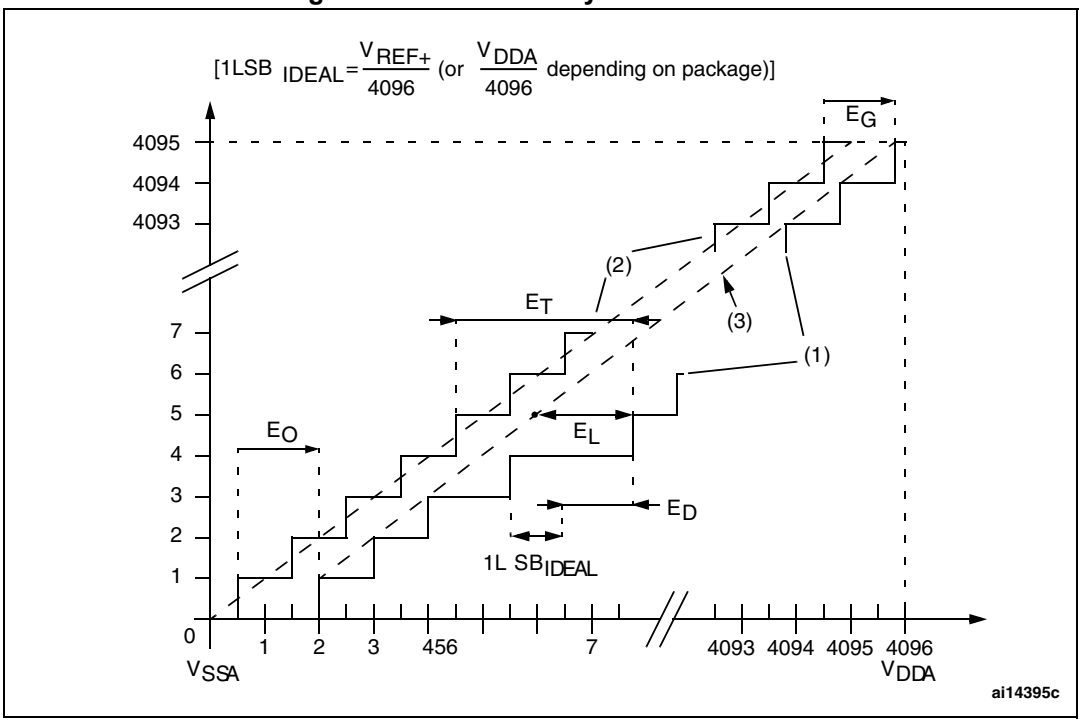

1. See also *Table 68*.
2. Example of an actual transfer curve.
3. Ideal transfer curve.
4. End point correlation line.
5. E_T = Total Unadjusted Error: maximum deviation between the actual and the ideal transfer curves.
   EO = Offset Error: deviation between the first actual transition and the first ideal one.
   EG = Gain Error: deviation between the last ideal transition and the last actual one.
   ED = Differential Linearity Error: maximum deviation between actual steps and the ideal one.
   EL = Integral Linearity Error: maximum deviation between any actual transition and the end point correlation line.

Figure 41. Typical connection diagram using the ADC

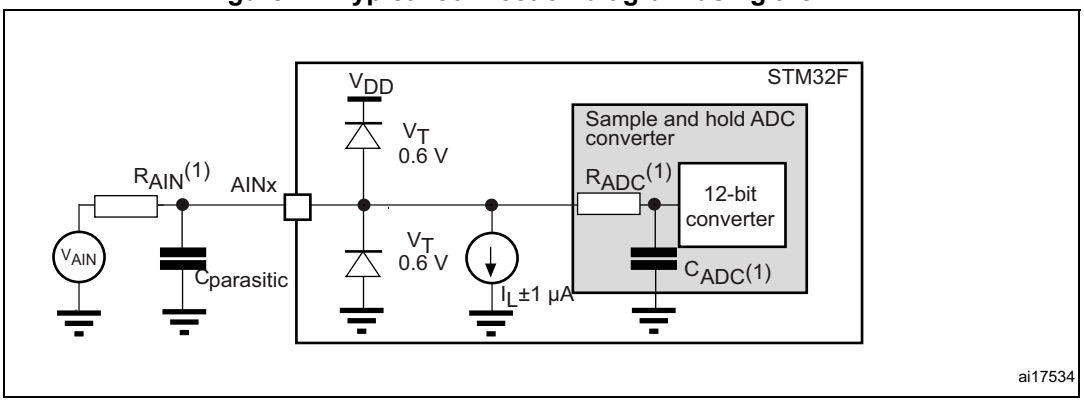

1. Refer to *Table 66* for the values of R_{AIN}, R_{ADC} and C_{ADC}.
2. $C_{parasitic}$ represents the capacitance of the PCB (dependent on soldering and PCB layout quality) plus the pad capacitance (roughly 5 pF). A high $C_{parasitic}$ value downgrades conversion accuracy. To remedy this, f_{ADC} should be reduced.

General PCB design guidelines

Power supply decoupling should be performed as shown in *Figure 42* or *Figure 43*, depending on whether V_{REF+} is connected to V_{DDA} or not. The 10 nF capacitors should be ceramic (good quality). They should be placed them as close as possible to the chip.

Figure 42. Power supply and reference decoupling (V_{REF+} not connected to V_{DDA})

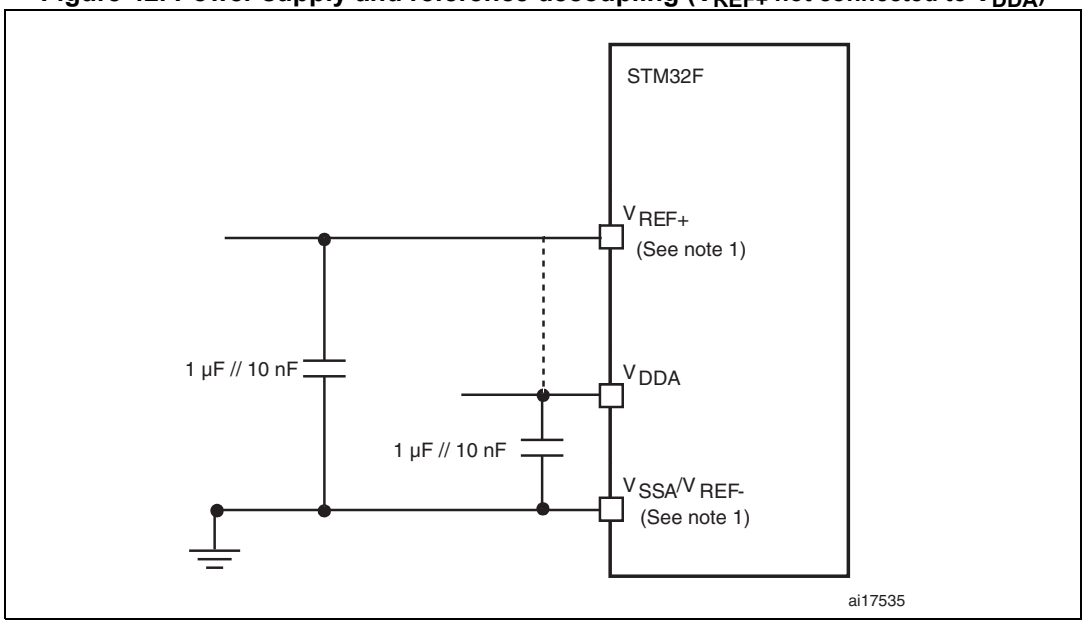

1. V_{REF+} and V_{REF-} inputs are both available on UFBGA100. V_{REF+} is also available on LQFP100. When V_{REF+} and V_{REF-} are not available, they are internally connected to V_{DDA} and V_{SSA}.

Figure 43. Power supply and reference decoupling (V_{REF+} connected to V_{DDA})

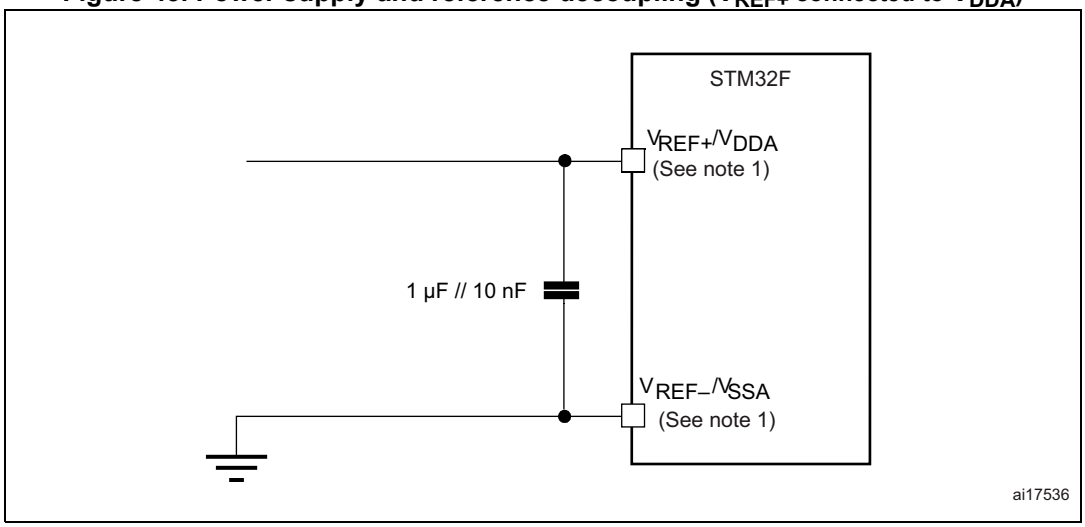

1. V_{REF+} and V_{REF-} inputs are both available on UFBGA100. V_{REF+} is also available on LQFP100. When V_{REF+} and V_{REF-} are not available, they are internally connected to V_{DDA} and V_{SSA}.

6.3.21 Temperature sensor characteristics

Table 72. Temperature sensor characteristics

Symbol	Parameter	Min	Typ	Max	Unit
T_L(1)	V_{SENSE} linearity with temperature	-	±1	±2	°C
Avg_Slope(1)	Average slope	-	2.5	-	mV/°C
V_{25}(1)	Voltage at 25 °C	-	0.76	-	V
t_{START}(2)	Startup time	-	6	10	µs
T_{S_temp}(2)	ADC sampling time when reading the temperature (1 °C accuracy)	10	-	-	µs

1. Guaranteed by characterization, not tested in production.
2. Guaranteed by design, not tested in production.

Table 73. Temperature sensor calibration values

Symbol	Parameter	Memory address
TS_CAL1	TS ADC raw data acquired at temperature of 30 °C, V_{DDA}= 3.3 V	0x1FFF 7A2C - 0x1FFF 7A2D
TS_CAL2	TS ADC raw data acquired at temperature of 110 °C, V_{DDA}= 3.3 V	0x1FFF 7A2E - 0x1FFF 7A2F

6.3.22 V_{BAT} monitoring characteristics

Table 74. V_{BAT} monitoring characteristics

Symbol	Parameter	Min	Typ	Max	Unit
R	Resistor bridge for V_{BAT}	-	50	-	KΩ
Q	Ratio on V_{BAT} measurement	-	4	-	
Er(1)	Error on Q	–1	-	+1	%
T_{S_vbat}(2)(2)	ADC sampling time when reading the V_{BAT} 1 mV accuracy	5	-	-	µs

1. Guaranteed by design, not tested in production.
2. Shortest sampling time can be determined in the application by multiple iterations.

6.3.23 Embedded reference voltage

The parameters given in *Table 75* are derived from tests performed under ambient temperature and V_{DD} supply voltage conditions summarized in *Table 14*.

Table 75. Embedded internal reference voltage

Symbol	Parameter	Conditions	Min	Typ	Max	Unit
V_{REFINT}	Internal reference voltage	–40 °C < T_A < +105 °C	1.18	1.21	1.24	V
$T_{S\_vrefint}$(1)	ADC sampling time when reading the internal reference voltage	-	10	-	-	µs
V_{RERINT_s}(2)	Internal reference voltage spread over the temperature range	V_{DD} = 3V ± 10mV	-	3	5	mV

Table 75. Embedded internal reference voltage (continued)

Symbol	Parameter	Conditions	Min	Typ	Max	Unit
T_{Coeff}(2)	Temperature coefficient	-	-	30	50	ppm/°C
t_{START}(2)	Startup time	-	-	6	10	µs

1. Shortest sampling time can be determined in the application by multiple iterations.
2. Guaranteed by design, not tested in production

Table 76. Internal reference voltage calibration values

Symbol	Parameter	Memory address
V_{REFIN_CAL}	Raw data acquired at temperature of 30 °C V_{DDA} = 3.3 V	0x1FFF 7A2A - 0x1FFF 7A2B

6.3.24 SD/SDIO MMC card host interface (SDIO) characteristics

Unless otherwise specified, the parameters given in *Table 77* for the SDIO/MMC interface are derived from tests performed under the ambient temperature, f_{PCLK2} frequency and V_{DD} supply voltage conditions summarized in *Table 14*, with the following configuration:

- Output speed is set to OSPEEDRy[1:0] = 10
- Capacitive load C = 30 pF
- Measurement points are done at CMOS levels: $0.5V_{DD}$

Refer to *Section 6.3.16: I/O port characteristics* for more details on the input/output characteristics.

Figure 44. SDIO high-speed mode

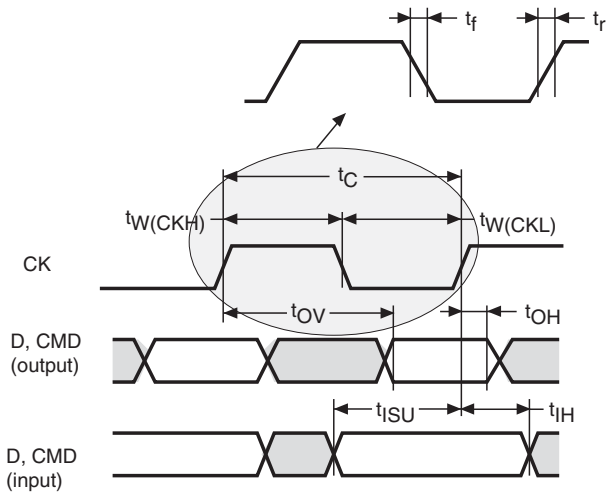

Figure 45. SD default mode

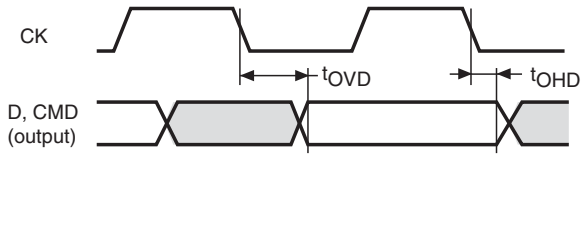

Table 77. Dynamic characteristics: SD / MMC characteristics(1)(2)

Symbol	Parameter	Conditions	Min	Typ	Max	Unit
f_{PP}	Clock frequency in data transfer mode		0	-	48	MHz
-	SDIO_CK/fPCLK2 frequency ratio		-	-	8/3	-
$t_{W(CKL)}$	Clock low time	fpp = 48MHz	8.5	9	-	ns
$t_{W(CKH)}$	Clock high time	fpp = 48MHz	8.3	10	-	
CMD, D inputs (referenced to CK) in MMC and SD HS mode						
t_{ISU}	Input setup time HS	fpp = 48MHz	3.5	-	-	ns
t_{IH}	Input hold time HS	fpp = 48MHz	0	-	-	
CMD, D outputs (referenced to CK) in MMC and SD HS mode						
t_{OV}	Output valid time HS	fpp = 48MHz	-	4.5	7	ns
t_{OH}	Output hold time HS	fpp = 48MHz	3	-	-	
CMD, D inputs (referenced to CK) in SD default mode						
t_{ISUD}	Input setup time SD	fpp = 24MHz	1.5	-	-	ns
t_{IHD}	Input hold time SD	fpp = 24MHz	0.5	-	-	
CMD, D outputs (referenced to CK) in SD default mode						
t_{OVD}	Output valid default time SD	fpp =24MHz	-	4.5	6.5	ns
t_{OHD}	Output hold default time SD	fpp =24MHz	3.5	-	-	

1. Data based on characterization results, not tested in production.
2. V_{DD} = 2.7 to 3.6 V.

6.3.25 RTC characteristics

Table 78. RTC characteristics

Symbol	Parameter	Conditions	Min	Max
-	f_{PCLK1}/RTCCLK frequency ratio	Any read/write operation from/to an RTC register	4	-

7 Package characteristics

7.1 Package mechanical data

In order to meet environmental requirements, ST offers these devices in different grades of ECOPACK® packages, depending on their level of environmental compliance. ECOPACK® specifications, grade definitions and product status are available at: *www.st.com*. ECOPACK® is an ST trademark.

7.1.1 WLCSP49, 3.06 x 3.06 mm, 0.4 mm pitch wafer level chip size package

Figure 46. WLCSP49 wafer level chip size package outline

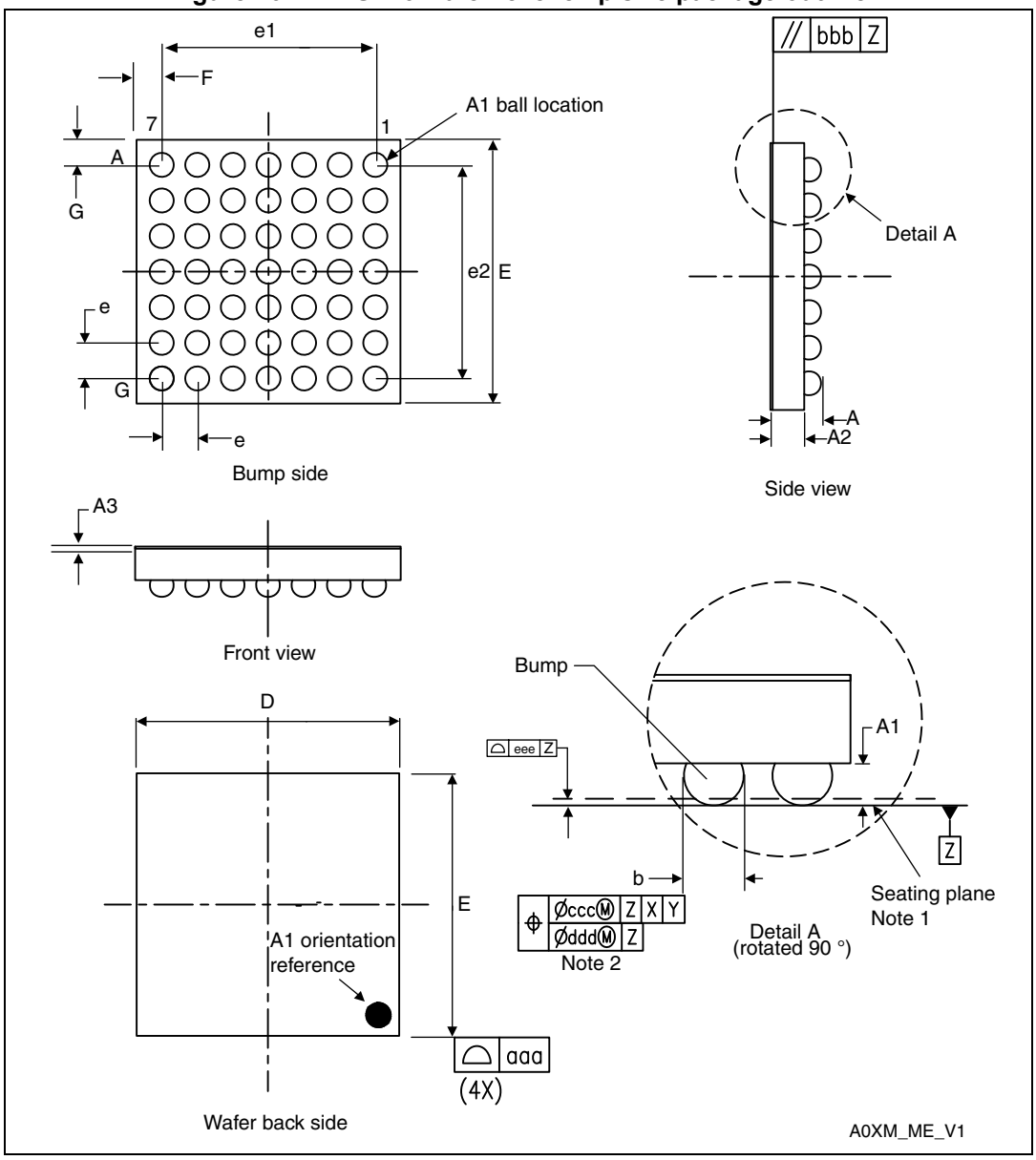

1. Drawing is not to scale.

Table 79. STM32F401xCE WLCSP49 wafer level chip size package mechanical data

Symbol	millimeters			inches(1)		
	Min	Typ	Max	Min	Typ	Max
A	0.525	0.555	0.585	0.0207	0.0219	0.0230
A1	-	0.175	-	-	0.0069	-

Table 79. STM32F401xCE WLCSP49 wafer level chip size package mechanical data

Symbol	millimeters			inches[1]		
	Min	Typ	Max	Min	Typ	Max
A2	-	0.380	-	-	0.0150	-
A3[2]	-	0.025	-	-	0.0010	-
b[3]	0.220	0.250	0.280	0.0087	0.0098	0.0110
D	2.994	3.029	3.064	0.1179	0.1193	0.1206
E	2.994	3.029	3.064	0.1179	0.1193	0.1206
e	-	0.400	-	-	0.0157	-
e1	-	2.400	-	-	0.0945	-
e2	-	2.400	-	-	0.0945	-
F	-	0.3145	-	-	0.0124	-
G	-	0.3145	-	-	0.0124	-
aaa	-	0.100	-	-	0.0039	-
bbb	-	0.100	-	-	0.0039	-
ccc	-	0.100	-	-	0.0039	-
ddd	-	0.050	-	-	0.0020	-
eee	-	0.050	-	-	0.0020	-

1. Values in inches are converted from mm and rounded to 4 decimal digits.
2. Back side coating
3. Dimension is measured at the maximum bump diameter parallel to primary datum Z.

Figure 47. WLCSP49 0.4 mm pitch wafer level chip size recommended footprint

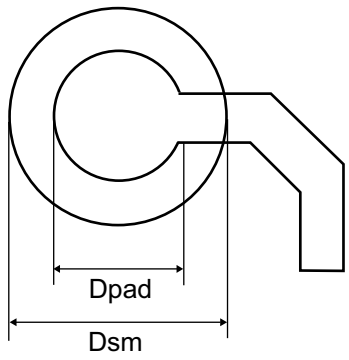

Table 80. WLCSP49 recommended PCB design rules (0.4 mm pitch)

Dimension	Recommended values
Pitch	0.4 mm
Dpad	260 µm max. (circular) 220 µm recommended
Dsm	300 µm min. (for 260 µm diameter pad)
PCB pad design	Non-solder mask defined via underbump allowed

Device marking

Figure 48. Example of WLCSP49 marking (top view)

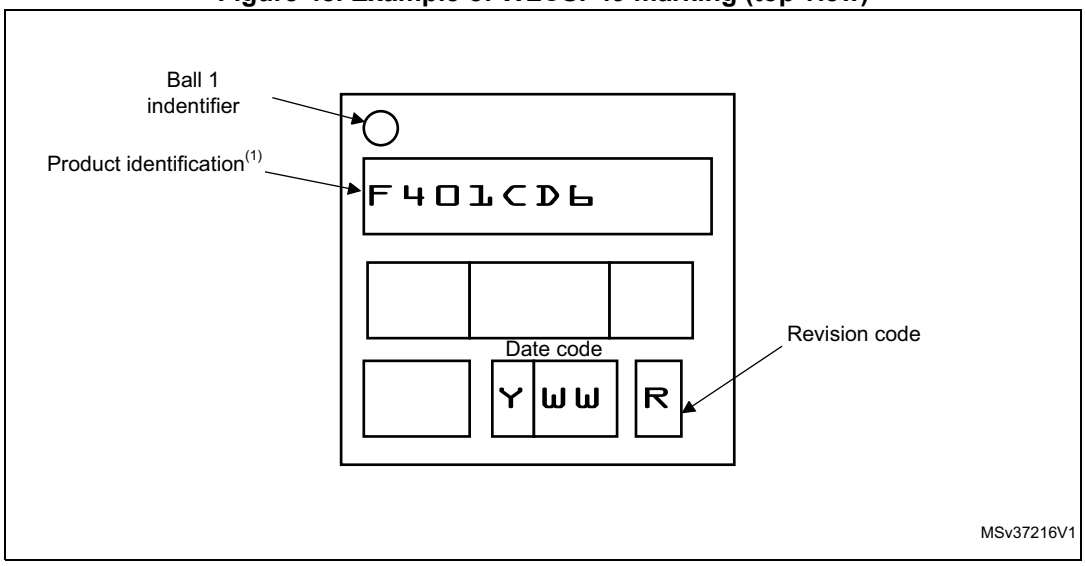

1. Parts marked as “ES”, “E” or accompanied by an Engineering Sample notification letter, are not yet qualified and therefore not yet ready to be used in production and any consequences deriving from such usage will not be at ST charge. In no event, ST will be liable for any customer usage of these engineering samples in production. ST Quality has to be contacted prior to any decision to use these Engineering samples to run qualification activity.

7.1.2 UFQFPN48, 7 x 7 mm, 0.5 mm pitch package

Figure 49. UFQFPN48, 7 x 7 mm, 0.5 mm pitch, package outline

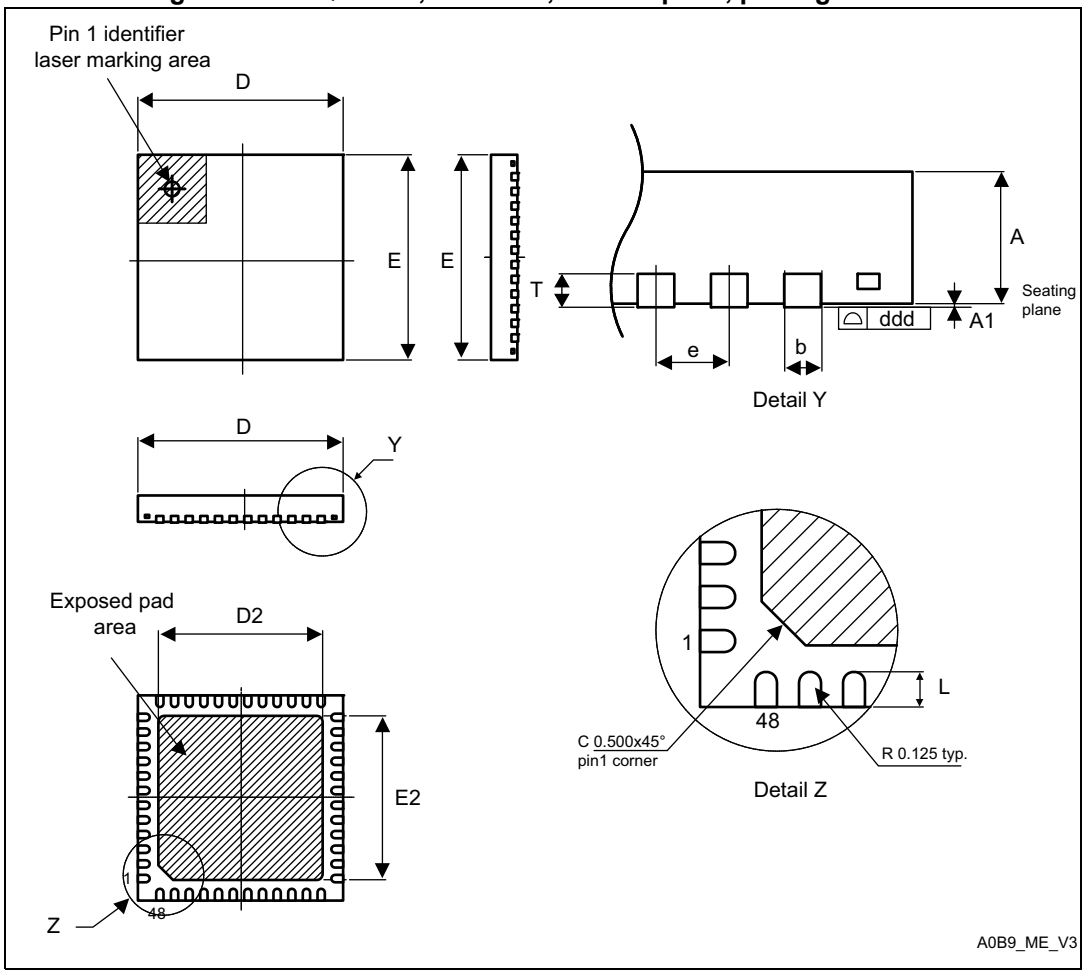

1. Drawing is not to scale.
2. All leads/pads should also be soldered to the PCB to improve the lead/pad solder joint life.
3. There is an exposed die pad on the underside of the UFQFPN package. It is recommended to connect and solder this back-side pad to PCB ground.

Table 81. UFQFPN48, 7 x 7 mm, 0.5 mm pitch, package mechanical data

Symbol	millimeters			inches(1)		
	Min.	Typ.	Max.	Min.	Typ.	Max.
A	0.500	0.550	0.600	0.0197	0.0217	0.0236
A1	0.000	0.020	0.050	0.0000	0.0008	0.0020
D	6.900	7.000	7.100	0.2717	0.2756	0.2795
E	6.900	7.000	7.100	0.2717	0.2756	0.2795
D2	5.500	5.600	5.700	0.2165	0.2205	0.2244
E2	5.500	5.600	5.700	0.2165	0.2205	0.2244
L	0.300	0.400	0.500	0.0118	0.0157	0.0197

Table 81. UFQFPN48, 7 x 7 mm, 0.5 mm pitch, package mechanical data (continued)

Symbol	millimeters			inches(1)		
	Min.	Typ.	Max.	Min.	Typ.	Max.
T	-	0.152	-	-	0.0060	-
b	0.200	0.250	0.300	0.0079	0.0098	0.0118
e	-	0.500	-	-	0.0197	-

1. Values in inches are converted from mm and rounded to 4 decimal digits.

Figure 50. UFQFPN48 recommended footprint

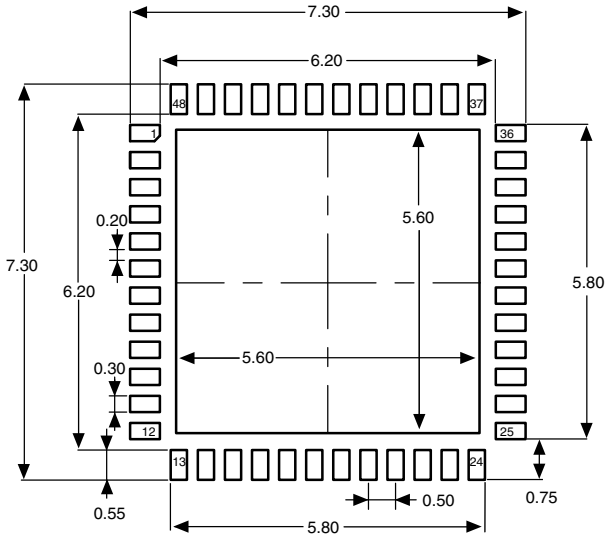

1. Dimensions are in millimeters.

Device marking

Figure 51. Example of UFQFPN48 marking (top view)

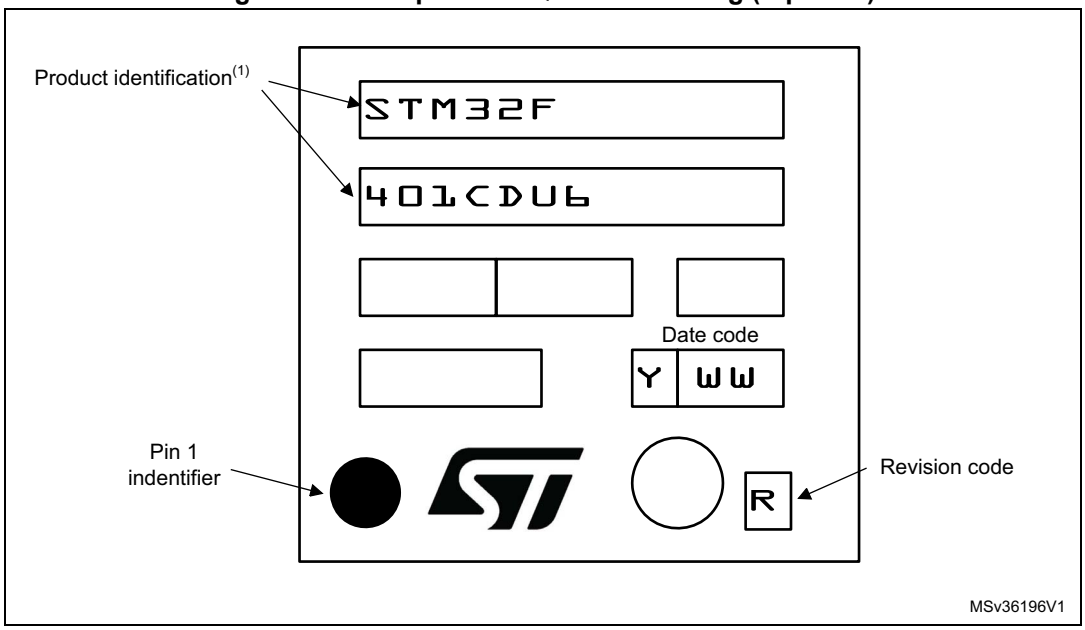

1. Parts marked as “ES”, “E” or accompanied by an Engineering Sample notification letter, are not yet qualified and therefore not yet ready to be used in production and any consequences deriving from such usage will not be at ST charge. In no event, ST will be liable for any customer usage of these engineering samples in production. ST Quality has to be contacted prior to any decision to use these Engineering samples to run qualification activity.

7.1.3 LQFP64, 10 x 10 mm, 64-pin low-profile quad flat package

Figure 52. LQFP64, 10 x 10 mm, 64-pin low-profile quad flat package outline

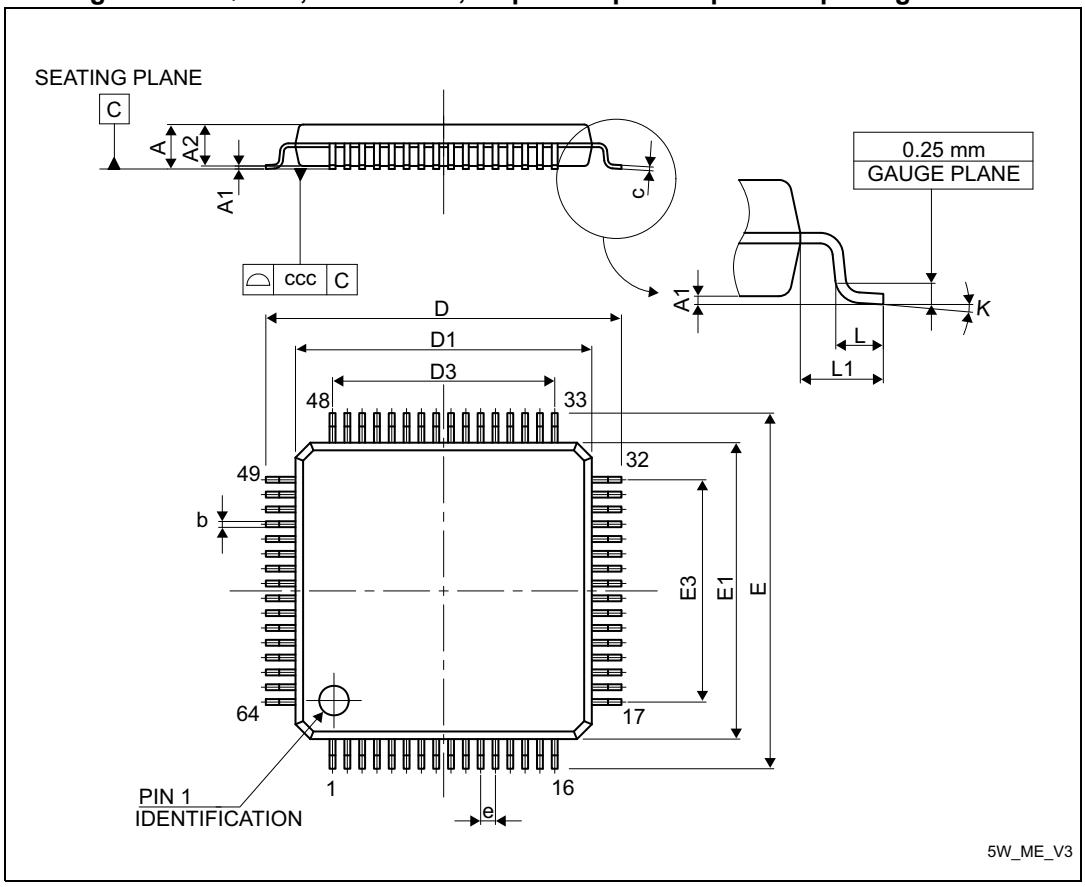

1. Drawing is not to scale.

Table 82. LQFP64, 10 x 10 mm, 64-pin low-profile quad flat package mechanical data

Symbol	millimeters			inches(1)		
	Min.	Typ.	Max.	Min.	Typ.	Max.
A	-	-	1.60	-	-	0.0630
A1	0.05	-	0.15	0.0020	-	0.0059
A2	1.35	1.40	1.45	0.0531	0.0551	0.0571
b	0.17	0.22	0.27	0.0067	0.0087	0.0106
c	0.09	-	0.20	0.0035	-	0.0079
D	-	12.00	-	-	0.4724	-
D1	-	10.00	-	-	0.3937	-
E	-	12.00	-	-	0.4724	-
E1	-	10.00	-	-	0.3937	-
e	-	0.50	-	-	0.0197	-
K	0°	3.5°	7°	0°	3.5°	7°
L	0.45	0.60	0.75	0.0177	0.0236	0.0295
L1	-	1.00	-	-	0.0394	-
N	Number of pins					
	64					

1. Values in inches are converted from mm and rounded to 4 decimal digits.

Figure 53. LQFP64 recommended footprint

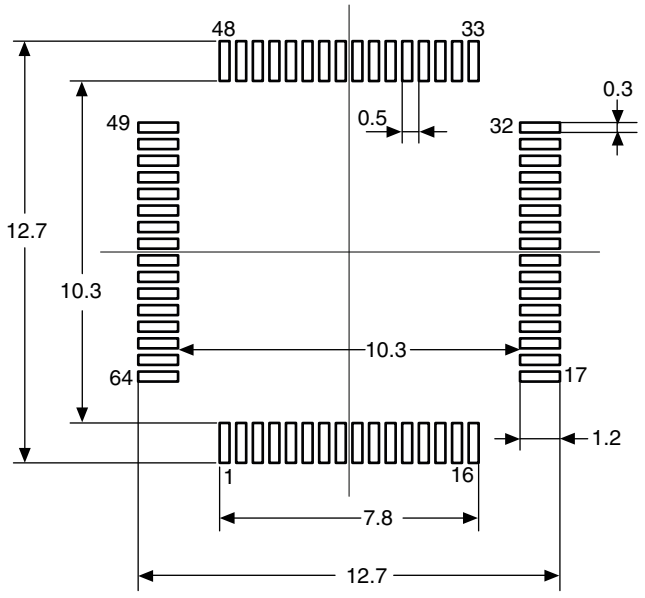

1. Dimensions are in millimeters.

Device marking

Figure 54. Example of LQFP64 marking (top view)

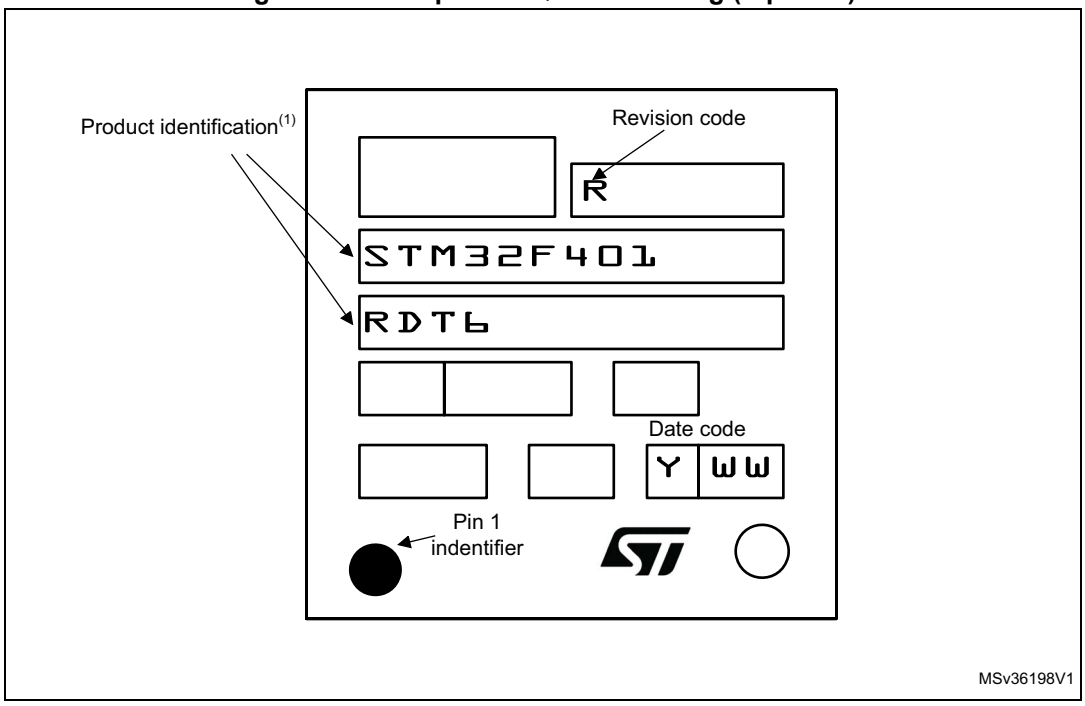

1. Parts marked as “ES”, “E” or accompanied by an Engineering Sample notification letter, are not yet qualified and therefore not yet ready to be used in production and any consequences deriving from such usage will not be at ST charge. In no event, ST will be liable for any customer usage of these engineering samples in production. ST Quality has to be contacted prior to any decision to use these Engineering samples to run qualification activity.

7.1.4 LQFP100, 14 x 14 mm, 100-pin low-profile quad flat package

Figure 55. LQFP100, 14 x 14 mm, 100-pin low-profile quad flat package outline

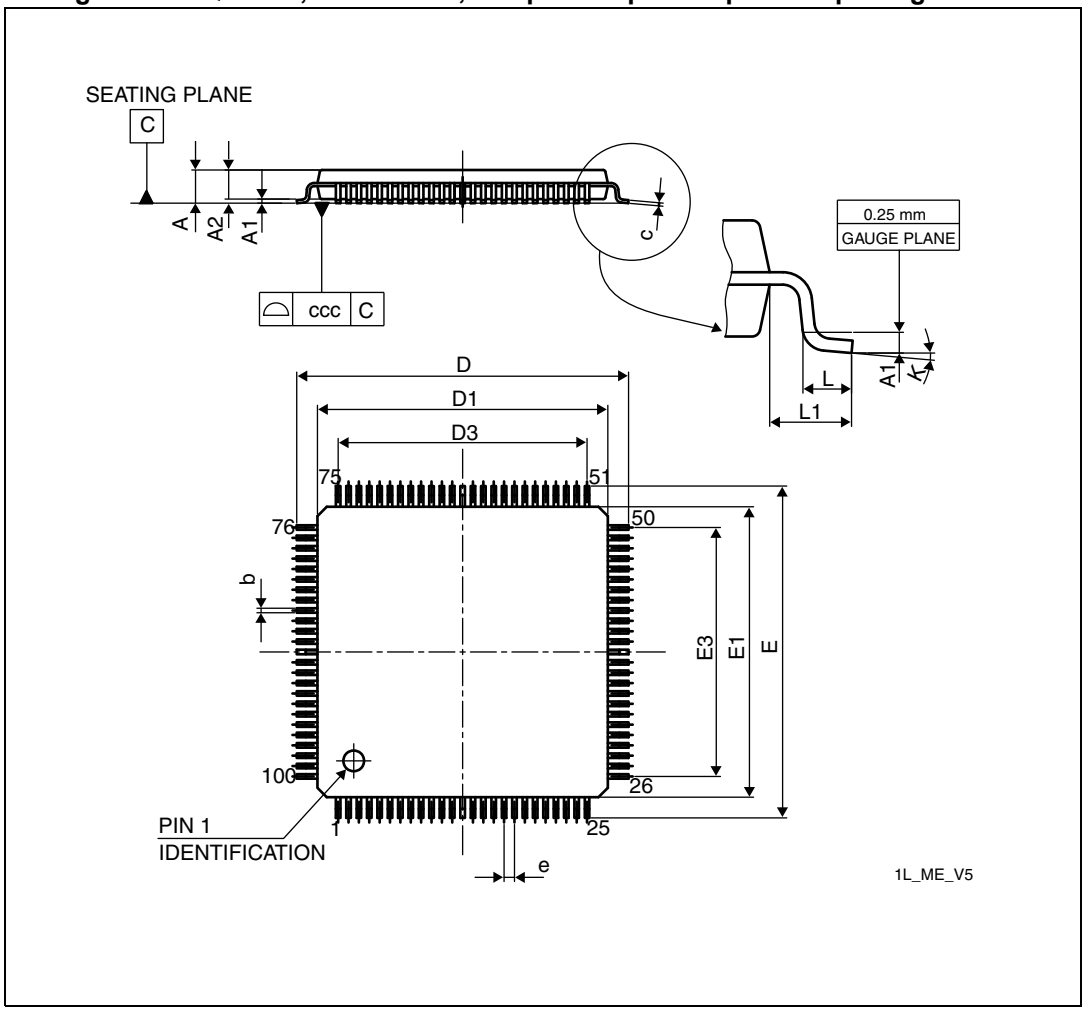

1. Drawing is not to scale.

Table 83. LQPF100, 14 x 14 mm, 100-pin low-profile quad flat package mechanical data

Symbol	millimeters			inches[1]		
	Min.	Typ.	Max.	Min.	Typ.	Max.
A	-	-	1.6	-	-	0.063
A1	0.05	-	0.15	0.002	-	0.0059
A2	1.35	1.4	1.45	0.0531	0.0551	0.0571
b	0.17	0.22	0.27	0.0067	0.0087	0.0106
c	0.09	-	0.2	0.0035	-	0.0079
D	15.8	16	16.2	0.622	0.6299	0.6378
D1	13.8	14	14.2	0.5433	0.5512	0.5591
D3	-	12	-	-	0.4724	-
E	15.8	16	16.2	0.622	0.6299	0.6378
E1	13.8	14	14.2	0.5433	0.5512	0.5591
E3	-	12	-	-	0.4724	-
e	-	0.5	-	-	0.0197	-
L	0.45	0.6	0.75	0.0177	0.0236	0.0295
L1	-	1	-	-	0.0394	-
K	0.0°	3.5°	7.0°	0.0°	3.5°	7.0°
ccc	0.08			0.0031		

1. Values in inches are converted from mm and rounded to 4 decimal digits.

Figure 56. LQFP100 recommended footprint

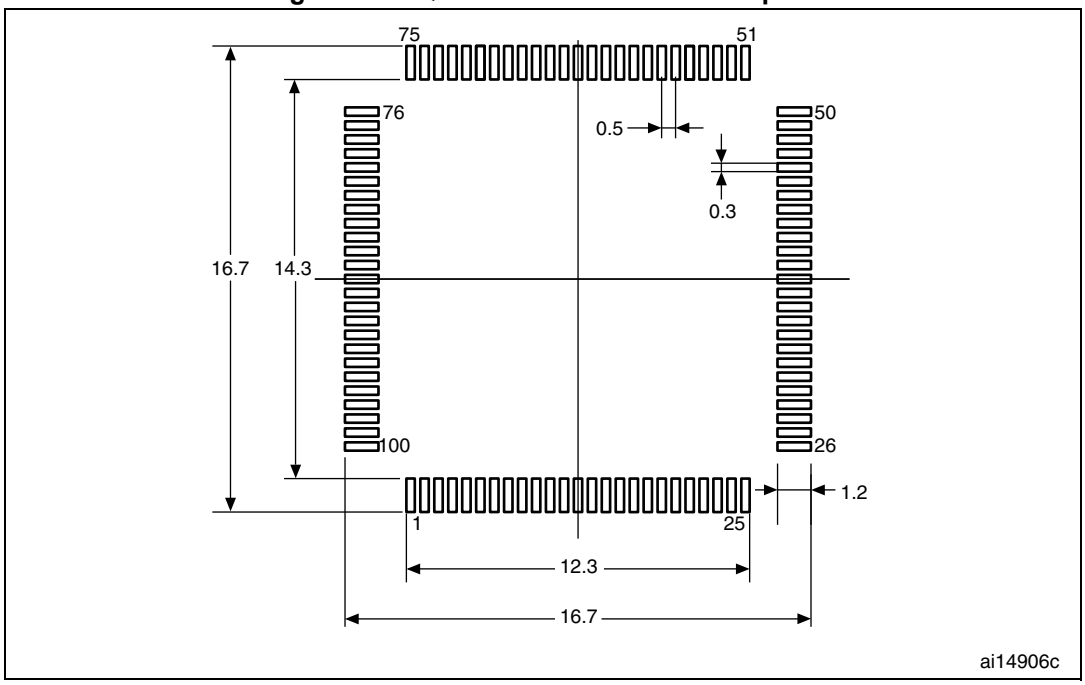

1. Dimensions are in millimeters.

Device marking

Figure 57. Example of LQPF100 marking (top view)

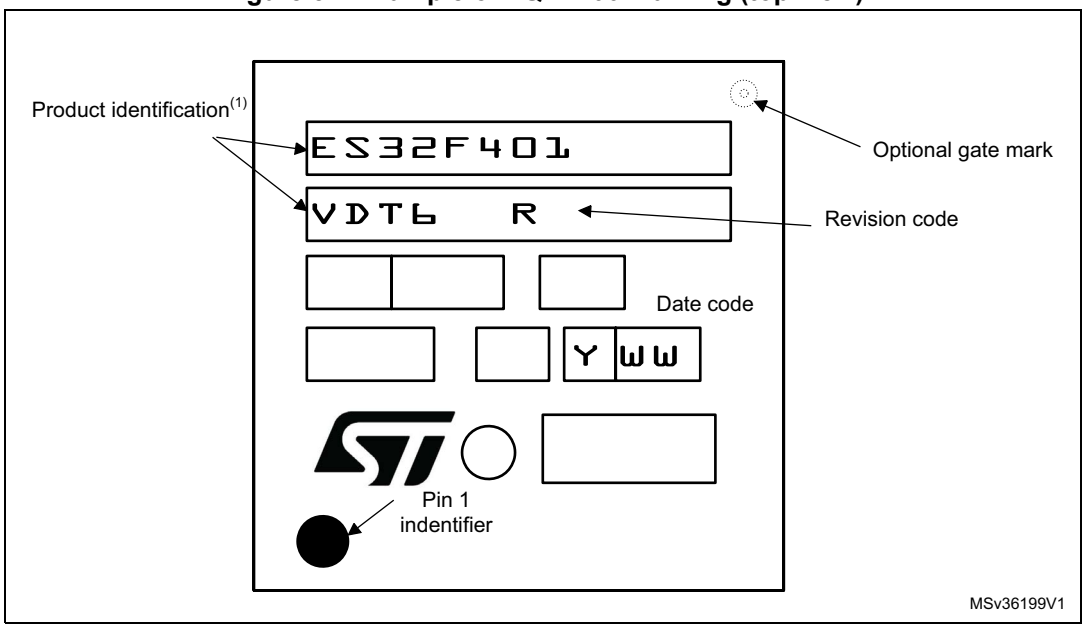

1. Parts marked as “ES”, “E” or accompanied by an Engineering Sample notification letter, are not yet qualified and therefore not yet ready to be used in production and any consequences deriving from such usage will not be at ST charge. In no event, ST will be liable for any customer usage of these engineering samples in production. ST Quality has to be contacted prior to any decision to use these Engineering samples to run qualification activity.

7.1.5 UFBGA100, 7 x 7 mm, 0.5 mm pitch package

Figure 58. UFBGA100, 7 x 7 mm, 0.50 mm pitch, ultra fine pitch ball grid array package outline

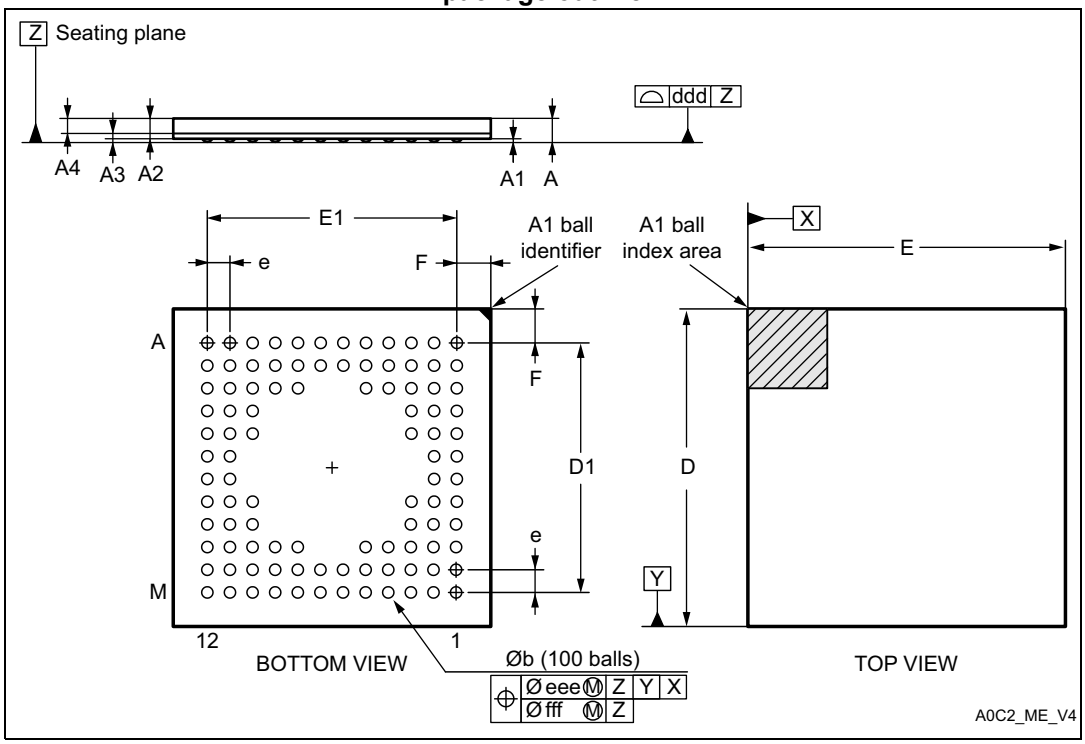

1. Drawing is not to scale.

Table 84. UFBGA100, 7 x 7 mm, 0.50 mm pitch, ultra fine pitch ball grid array package mechanical data

Symbol	millimeters			inches(1)		
	Min.	Typ.	Max.	Min.	Typ.	Max.
A	0.460	0.530	0.600	0.0181	0.0209	0.0236
A1	0.050	0.080	0.110	0.0020	0.0031	0.0043
A2	0.400	0.450	0.500	0.0157	0.0177	0.0197
A3	-	0.130	-	-	0.0051	-
A4	0.270	0.320	0.370	0.0106	0.0126	0.0146
b	0.200	0.250	0.300	0.0079	0.0098	0.0118
D	6.950	7.000	7.050	0.2736	0.2756	0.2776
D1	5.450	5.500	5.550	0.2146	0.2165	0.2185
E	6.950	7.000	7.050	0.2736	0.2756	0.2776
E1	5.450	5.500	5.550	0.2146	0.2165	0.2185
e	-	0.500	-	-	0.0197	-
F	0.700	0.750	0.800	0.0276	0.0295	0.0315

Table 84. UFBGA100, 7 x 7 mm, 0.50 mm pitch, ultra fine pitch ball grid array package mechanical data (continued)

Symbol	millimeters			inches(1)		
	Min.	Typ.	Max.	Min.	Typ.	Max.
ddd	-	-	0.100	-	-	0.0039
eee	-	-	0.150	-	-	0.0059
fff	-	-	0.050	-	-	0.0020

1. Values in inches are converted from mm and rounded to 4 decimal digits.

Figure 59. Recommended PCB design rules for pads (0.5 mm-pitch BGA)

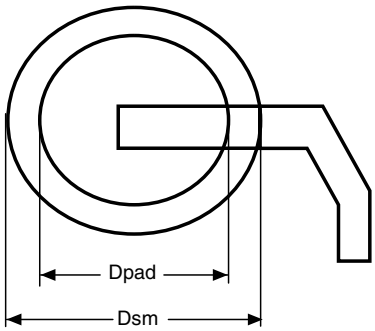

Pitch	0.5 mm
D pad	0.27 mm
Dsm	0.35 mm typ (depends on the soldermask registration tolerance)
Solder paste	0.27 mm aperture diameter

ai15495

1. Non solder mask defined (NSMD) pads are recommended.
2. 4 to 6 mils solder paste screen printing process.

Device marking

Figure 60. Example of UFBGA100 marking (top view)

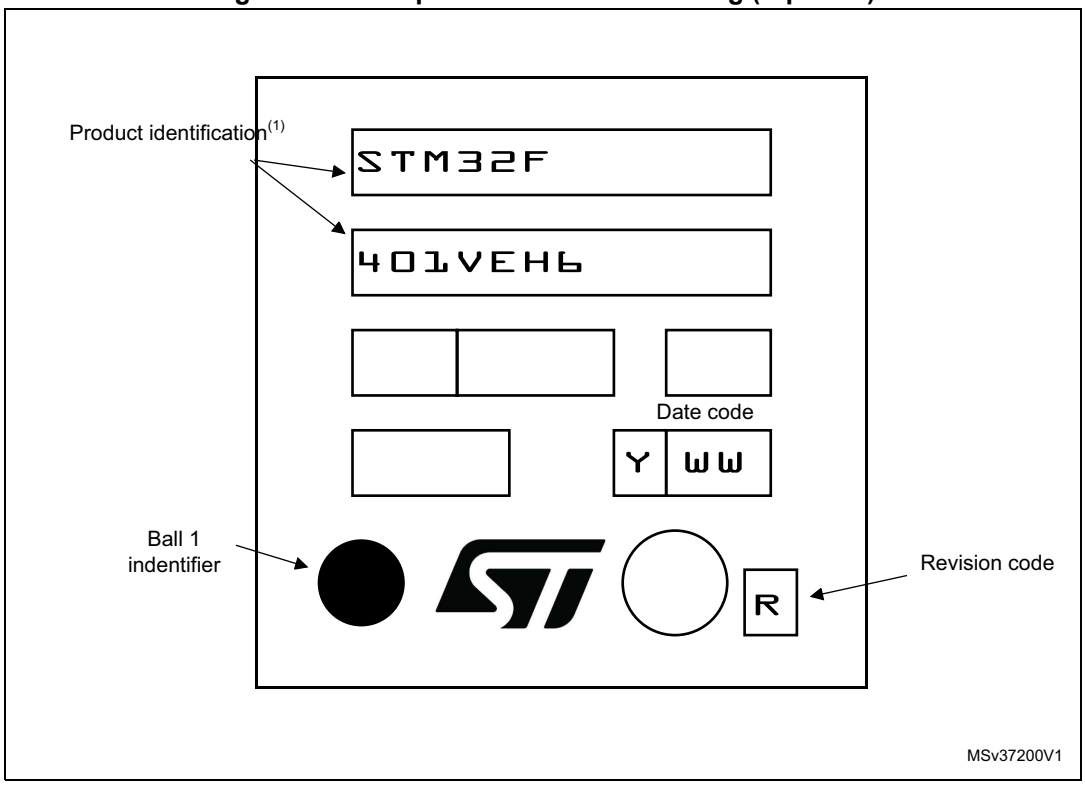

1. Parts marked as “ES”, “E” or accompanied by an Engineering Sample notification letter, are not yet qualified and therefore not yet ready to be used in production and any consequences deriving from such usage will not be at ST charge. In no event, ST will be liable for any customer usage of these engineering samples in production. ST Quality has to be contacted prior to any decision to use these Engineering samples to run qualification activity.

7.2 Thermal characteristics

The maximum chip junction temperature ($T_J$max) must never exceed the values given in *Table 14: General operating conditions on page 60*.

The maximum chip-junction temperature, T_J max., in degrees Celsius, may be calculated using the following equation:

T_J max = T_A max + (PD max x Θ_{JA})

Where:

- T_A max is the maximum ambient temperature in °C,
- Θ_{JA} is the package junction-to-ambient thermal resistance, in °C/W,
- PD max is the sum of P_{INT} max and $P_{I/O}$ max (PD max = P_{INT} max + $P_{I/O}$max),
- P_{INT} max is the product of I_{DD} and V_{DD}, expressed in Watts. This is the maximum chip internal power.

$P_{I/O}$ max represents the maximum power dissipation on output pins where:

$$P_{I/O} \text{ max} = \Sigma (V_{OL} \times I_{OL}) + \Sigma((V_{DD} - V_{OH}) \times I_{OH}),$$

taking into account the actual V_{OL} / I_{OL} and V_{OH} / I_{OH} of the I/Os at low and high level in the application.

Table 85. Package thermal characteristics

Symbol	Parameter	Value	Unit
Θ_{JA}	**Thermal resistance junction-ambient** UFQFPN48	32	°C/W
	Thermal resistance junction-ambient WLCSP49	51	
	Thermal resistance junction-ambient LQFP64	50	
	Thermal resistance junction-ambient LQFP100	42	
	Thermal resistance junction-ambient UFBGA100	56	

7.2.1 Reference document

JESD51-2 Integrated Circuits Thermal Test Method Environment Conditions - Natural Convection (Still Air). Available from www.jedec.org.

8 Part numbering

Table 86. Ordering information scheme

Example: STM32 F 401 C E Y 6 TR

Device family

STM32 = ARM-based 32-bit microcontroller

Product type

F = General-purpose

Device subfamily

401 = 401 family

Pin count

C = 48/49 pins

R = 64 pins

V = 100 pins

Flash memory size

D = 384 Kbytes of Flash memory

E = 512 Kbytes of Flash memory

Package

H = UFBGA

T = LQFP

U = UFQFPN

Y = WLCSP

Temperature range

6 = Industrial temperature range, –40 to 85 °C

Packing

TR = tape and reel

No character = tray or tube

Table 87. Device order codes

Reference	Order codes
STM32F401xD	STM32F401CDY6, STM32F401RDT6, STM32F401VDT6, STM32F401CDU6, STM32F401VDH6
STM32F401xE	STM32F401CEY6, STM32F401RET6, STM32F401VET6, STM32F401CEU6, STM32F401VEH6

9 Revision history

Table 88. Document revision history

Date	Revision	Changes
16-Jan-2014	1	Initial release.
24-Feb-2014	2	Updated Flash memory size in *Table 2: STM32F401xD/xE features and peripheral counts*. Added alternate functions mapped on PCx, PDx and PEx GPIOS in *Table 9: Alternate function mapping*
22-Jan-2015	3	Updated UFQFPN48 in *Table 3: Regulator ON/OFF and internal power supply supervisor availability*. Updated number of EXTI lines in *Section 3.10: External interrupt/event controller (EXTI)*. Updated *Table 54: I/O static characteristics* Added WLCSP49 *Figure 47: WLCSP49 0.4 mm pitch wafer level chip size recommended footprint* and *Table 80: WLCSP49 recommended PCB design rules (0.4 mm pitch)*. Updated *Figure 48: Example of WLCSP49 marking (top view).* Updated *Figure 51: Example of UFQFPN48 marking (top view).* Updated *Figure 54: Example of LQFP64 marking (top view).* Updated *Figure 57: Example of LQPF100 marking (top view).* Updated *Figure 60: Example of UFBGA100 marking (top view).* Added notes below all engineering sample marking schematics.

Tema n. 5

Il settore biomedicale e quello del monitoraggio ambientale sono tra i campi più promettenti per l'applicazione di sensori basati su micro e nanotecnologie. Oltre alle problematiche di trasduzione e trattamento del segnale, tali dispositivi devono essere portatili e in grado di interfacciarsi con i fluidi di interesse.

Il candidato progetti un dispositivo completo per la diagnostica medica o ambientale tipo Lab-On-Chip (LOC), dotato di sensori basati su micro e nanotecnologie, quali ad esempio Micro Electro Mechanical Systems (MEMS) o Field Effect Transistors (FET).

In particolare, motivando le proprie scelte anche con riferimenti quantitativi, si riporti:

- uno schematico complessivo e delle singole parti
- il principio di trasduzione del segnale da parte del sensore
- la microfluidica di interfacciamento
- i passi di processo per la fabbricazione
- l'integrazione con l'elettronica di gestione
- una tipica curva di taratura
- una o più figure di merito (sensibilità, precisione, ecc...)

Tema n. 6

Un sistema di riconoscimento immagini (e.g., dipinti, edifici, oggetti generici, etc.) opera secondo le modalità seguenti. Una telecamera acquisisce un flusso video in alta definizione. Il video viene trasferito e catturato da un processo che ne effettua la manipolazione fotogramma per fotogramma estraendo le caratteristiche principali di ciascuna immagine. Tali caratteristiche vengono confrontare con quelle relative a un data-base di immagini. Il sistema segnala quando uno dei fotogrammi ricevuti ha elementi comuni con una delle immagini del data-base.

Il processo che effettua la manipolazione delle immagini, esegue diverse trasformazioni sull'immagine stessa. I candidati devono effettuare l'implementazione delle operazioni di seguito dettagliate.

Rappresentare la stessa immagine in scale differenti (*scale space representation*) è fondamentale al fine di rendere l'immagine sfocata, trascurandone così dettagli insignificanti. Un esempio di tale procedimento è rappresentato dalla seguente sequenza di immagini.

Tale processo può essere realizzato "filtrando" l'immagine ripetutamente tramite convoluzione con filtri Gaussiani di dimensione crescente. I filtri di dimensione 3x3 e 5x5 sono di seguito rappresentati:

1	2	1
2	4	2
1	2	1

1/16

1	4	7	4	1
4	16	26	16	4
7	26	41	26	7
4	16	26	16	4
1	4	7	4	1

1/273

Supponendo che ciascun pixel sia rappresentato tramite il suo tono di grigio (ovvero tramite un valore intero), la convoluzione "media" il valore di ogni pixel dell'immagine con il valore dei pixel contigui. In questo modo, dopo la convoluzione, ciascun pixel assume un valore che è dato dalla media pesata dal filtro dei valori dei pixel adiacenti al pixel considerato e presenti all'interno del filtro stesso. Ad esempio, l'immagine successiva di sinistra (di dimensione pari a 6x6 pixel) viene trasformata in quella di destra mediante convoluzione con il filtro 3x3.

	1	***2***	***3***	***4***	***5***	***6***
1	15	20	25	25	15	10
2	20	15	50	30	20	15
3	20	50	55	60	30	20
4	20	15	65	30	15	30
5	15	20	30	20	25	30
6	20	25	15	20	10	15

	1	***2***	***3***	***4***	***5***	***6***
1	15	20	24	23	16	10
2	19	28	38	35	23	15
3	20	35	48	43	28	21
4	19	31	42	36	26	28
5	18	23	28	25	22	21
6	20	21	19	16	14	15

Il pixel della riga 5 e colonna 2 (in grigio scuro) è stato calcolato (in base ai valori dei pixel nella zona grigia chiara) come segue: $\frac{20\cdot1+15\cdot2+65\cdot1+15\cdot2+20\cdot4+30\cdot2+20\cdot1+25\cdot2+15\cdot1}{16} = 23.$

Si sviluppi in ambiente UNIX/Linux oppure Windows, il linguaggio C oppure C-like, il seguente processo:

- Il flusso video viene ricevuto dal processo tramite pipe. Ciascun pixel è identificato tramite un valore intero su 16 bit, rappresentante il tono di grigio del pixel stesso. Formato, dimensione e frequenza di trasmissione delle immagini sulla pipe sono da definirsi.

- Il processo attiva due gruppi di thread che vengono eseguiti in sequenza (primo gruppo poi secondo gruppo) in maniera circolare.
    - Il primo gruppo è costituito da N thread. In generale, il valore di N è inferiore al numero di pixel presenti nell'immagine. I thread di tale gruppo effettuano la convoluzione di tutti i pixel dell'immagine ricevuta sulla pipe con il filtro di dimensione 3x3. L'ordine in cui le operazioni di convoluzione vengono effettuate (sui vari pixel) non ha importanza. Occorre però essere certi che ciascun pixel venga gestito un'unica volta. Ciascun pixel della nuova immagine generata viene salvato su file. Il formato del file deve essere definito. Quando tutti i pixel sono stati gestiti dagli N thread questi si occupano di risvegliare i thread del secondo gruppo e quindi si mettono in attesa dell'immagine successiva proveniente sulla pipe.
    - Il secondo gruppo è costituito da M thread. In generale, il valore di M è inferiore al numero di pixel presenti nell'immagine. I thread di tale gruppo effettuano la convoluzione di tutti i pixel dell'immagine memorizzata su file con il filtro di dimensione 5x5. Come per i thread del primo gruppo, l'ordine con cui le convoluzioni sono effettuate è arbitrario ma ogni pixel deve essere gestito una sola volta. I thread di tale gruppo vengono attivati solo quando tutti i pixel dell'immagine sono stati trattati dai thread del primo gruppo. L'immagine generata deve essere trasferita a un ulteriore processo (non sviluppato dal candidato) tramite pipe. Il formato di trasmissione sulla pipe deve essere definito. Una volta gestiti tutti i pixel dell'immagine gli M thread rimangono in attesa di essere risvegliati dai thread del primo gruppo per la manipolazione dell'immagine successiva.

Il candidato si occupi di curare in particolare modo i seguenti punti:

- Inizializzazione del processo e dei thread prima dell'arrivo della prima immagine.
- Formato della trasmissione delle immagini tramite pipe (in ingresso e in uscita) e sincronizzazione dei thread (del primo e del secondo gruppo) con i dati trasferiti.
- Sincronizzazione dei thread all'interno di ciascun gruppo al fine di gestire tutti i pixel dell'immagine una sola volta.
- Sincronizzazione dei thread del primo gruppo con quelli del secondo gruppo.
- Formato di memorizzazione dell'immagine convoluta con il filtro 3x3 su file.
- Corretta terminazione dei thread e del processo complessivo al termine della gestione del flusso video. Si definisca a tale proposito una plausibile politica di terminazione.